OR/D FAR Calculation		
	Net Floor Area (SF)	Lot Area (SF)
Non-Residential	773,974	
Total	773,974	
OR/D Zone Area		2,074,611 (47.63 Acres)
FAR[1]	773,974/2,074,611	0.37

[1] Building F, Main Cooling Towers, Backup Cooling Towers , Maintenance Building, Maintenance Garage, and Parking Garage are structures devoted to mechanical equipment and garage/loading space that support the OR/D zone uses.

Building Height Data			
Building Name	Height (Feet)[1]	Stories	Variance
Maintenance Garage	16.35	1	No
Maintenance Building	10.30	1	No
Parking Garage	42.43	4	No
Building JR-2	55.13	3	No
Main Cooling Towers	40.20	-	No
Building CT	21.20	1	No
Building Jd/Jo/Office/PDF	29.70	1/2/2/1	No
Building JR-1	53.35	3	No
Building N	53.45	3	No
Building M	43.68	3	No
Backup Cooling Towers	28.98	-	No
Building F	31.63	1	No
Building G	46.63	3	No
Building L	46.98	3	No
Building K	47.03	3	No
Building Hy	14.93	1	No

[1] Building height calculated in accordance with Section 126-2 of the Bridgewater Code; Definition for building height. Building height measured from average grade to parapet.
[2] Based on "Building Location Plan, New Jersey Center of Excellence," prepared by Gladstone Design, Inc., Dated October 24, 2017, Unrevised

Non-Residential Building Square Footage Data	
Building	Net Floor Area (SF)
G-Basement Office/Labs	8,505
G-1st Floor Office/Labs	8,706
G-2nd Floor Office/Labs	9,109
G-3rd Floor Office/Labs	12,415
G - TOTAL	38,735
L-Basement Office/Labs	11,515
L-1st Floor Office/Labs	10,030
L-2nd Floor Office/Labs	13,426
L-3rd Floor Office/Labs	12,436
L - TOTAL	47,407
K-1st Floor Not Leaseable, Common Amenity Space	11,007
K-1st Floor Office/Labs	4,827
K-2nd Floor Office/Labs	10,893
K-3rd Floor Office/Labs	10,777
K - TOTAL	37,504
Hy-1st Floor Not Leasable, Antiquated Vivarium	11,107
Hy - TOTAL	11,107
Jo - 1st Floor Office	9,425
Jo - 2nd Floor Office	9,425
Jd - 1st Floor Office	13,500
Jd - 2nd Floor Office	13,500
Jd - 1st Floor Pharm Development	21,100
Jd - 2nd Floor Pharm Development	17,830
Jd - 1st Floor Warehouse	58,000
Jd/Jo/Office/PDF - TOTAL	142,780
JR-1-Basement Office/Labs	11,299
JR-1-1st Floor Office/Labs	33,542
JR-1-2nd Floor Office/Labs	37,004
JR-1-3rd Floor Office/Labs	37,326
JR-1 - TOTAL	119,171
JR-2 1st Floor Office/Labs	59,602
JR-2 2nd Floor Office/Labs	61,859
JR-2 3rd Floor Office/Labs	57,809
JR-2 - TOTAL	179,270
N-1st Floor Office/Labs	50,667
N-2nd Floor Office/Labs	50,667
N-3rd Floor Office/Labs	50,666
N - TOTAL	152,000
M-1st Floor Office	15,334
M-2nd Floor Office	15,333
M-3rd Floor Office	15,333
M - TOTAL	46,000
Total	773,974

[1] Based on information provided by Bridgewater Tax Assessor.

Zoning Table
Portion of Block 483, Lots 17, 18, & 19
Zoning for New Jersey Center of Excellence
OR/D District (47.63 Acre Redevelopment Area)
1041 N.J.S.H Route 202/206, Township of Bridgewater, Somerset County, New Jersey

Ordinance #	Criteria	Required	Proposed	Variance Required
126-318.1.B.1	Use	Permited uses	Proposed (Compliant)	No
	Bulk Standards for OR/D District			
126-318.1.B.4	Principal Structures			
	Minimum Tract Size	45 Acres	47.63 Acres (2,074,610.94 SF)	No
	Minimum Front Yard Setback	N/A	N/A	No
	Minimum Setback from the Redevelopment Zone District Lines	25 FT	1.18 FT[2] (To Utility Plant)	Yes
	Minimum Lot Width	N/A	N/A	No
	Minimum Buffer Abutting Residential Uses	75 FT	75 FT	No
	Minimum Setback Abutting Residential Uses	75 FT	117 FT	No
	Minimum Setback + Buffer Abutting Residential Uses	75 FT + 75 FT = 150 FT	(117 FT +75 FT) = 192 FT	No
	Minimum Setback from an Interstate Highway	10 FT	142 FT	No
	Minimum Rear Yard Setback	75 FT	142 FT	No
	Maximum Percent Improved Lot Coverage	60%	43.8%	No
	Maximum Stories	5 Stories	3 Stories	No
	Maximum Building Height[1]	60 FT	55.13 FT	No
	Maximum Floor Area Ratio	0.40	0.37	No
	Maximum Height of Parking Garages	60 FT	42.43 FT	No
126-318.1.B.5	Accessory Uses and Structures			
	Minimum Side Yard Setback	75 FT	143 FT	No
	Minimum Rear Yard Setback	10 FT	59 FT	No
	Minimum Distance from a Single-Family Residential Zoning District Line	75 FT	75 FT	No
	Minimum Distance + Buffer from a Single-Family Residential Zoning District Line	75 FT + 10 FT = 85 FT	(75 FT + 68 FT) = 143 FT	No
	Minimum Distance from Redevelopment Zone District Lines	25 FT	213 FT	No
	Maximum Height of Parking Deck Structures	60 FT	42.43 FT	No
126-318.1.B.6	Minimum Parking Setback and Buffer Distance from Residential Zone	75 FT + 10 FT = 85 FT	143 FT	No
	Minimum Parking Setback Distance from Interstate Highway Right-of-Way	10 FT	165 FT	No

[1] Building height measured from average grade to parapet.
[2] To Utility Plant.

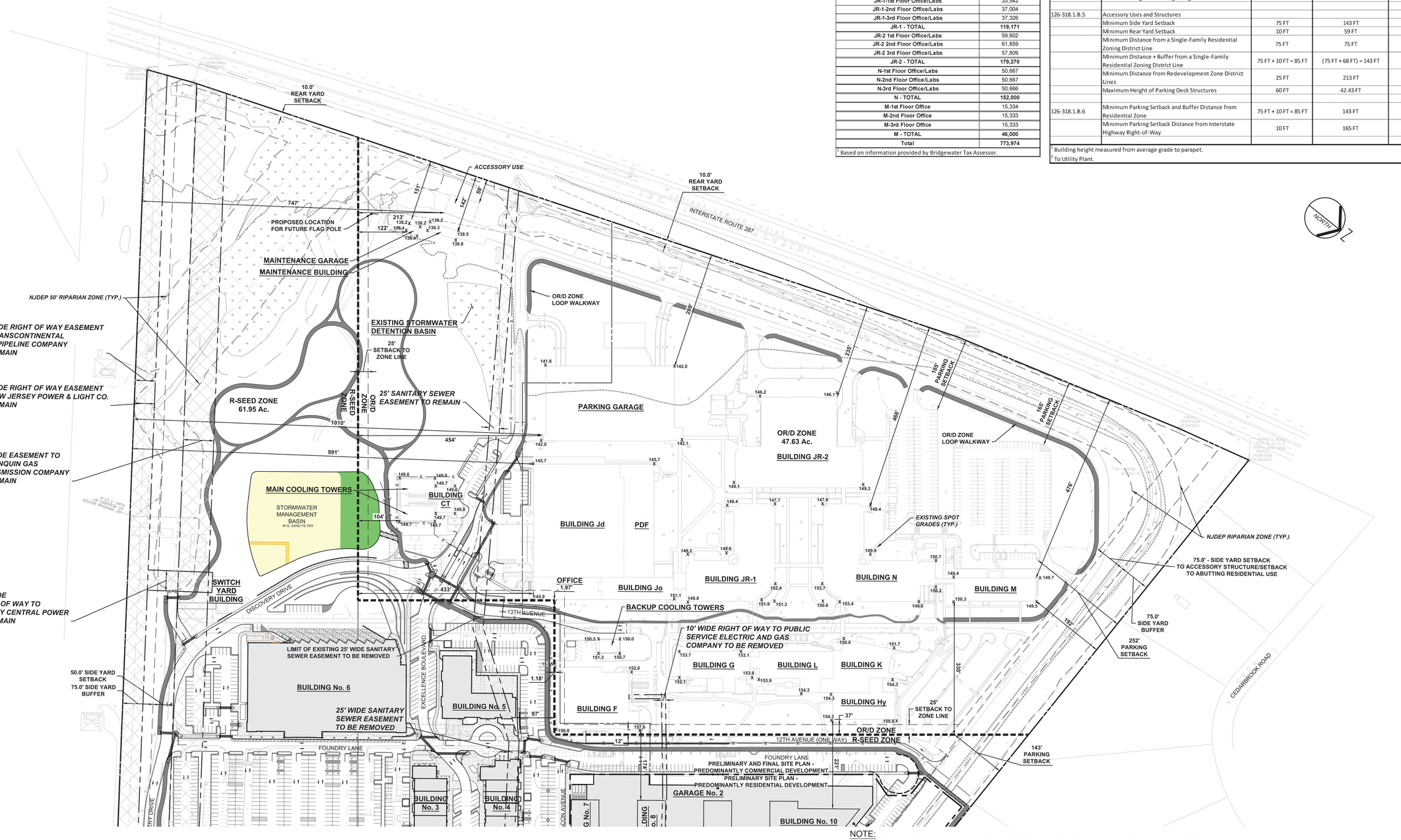

NOTE:
1. SETBACK DISTANCES ARE PROVIDED FROM THE LOT LINE TO THE CLOSEST POINT OF THE BUILDING WALL THAT FACES THAT PROPERTY LINE. SETBACK DISTANCES TO ANY OTHER POINT OF PROPOSED BUILDINGS ARE GREATER THAN THE SETBACK DISTANCE PROVIDED.
2. CROSS EASEMENTS TO BE PROVIDED AS NECESSARY.

LOOP WALKWAY

GRAPHIC SCALE
100 0 50 100 200
(IN FEET)
1 inch = 100 ft.

REV. / ISSUE	DATE	DESCRIPTION
1	11/12/18	REVISED PER BOARD COMMENTS
2	1/07/19	REVISED PER BOARD COMMENTS

CONSULTANT

ORIENTATION / KEY PLAN

PAULUS, SOKOLOWSKI AND SARTOR, LLC
67A MOUNTAIN BLVD EXT.
P.O. BOX 4039
WARREN, NEW JERSEY 07059
PHONE: (732) 560-9700
CERTIFICATE OF AUTHORIZATION NO. 24GA28032700

ALL DIMENSIONS MUST BE VERIFIED BY THE CONTRACTOR. NOTIFY PAULUS, SOKOLOWSKI AND SARTOR, LLC OF ANY CONFLICTS, ERRORS, AMBIGUITIES OR INCONSISTENCIES IN THE CONTRACT DOCUMENTS OR SPECIFICATIONS, BEFORE BEGINNING CONSTRUCTION.

ALL DIMENSIONS SHALL BE AS NOTED IN WORDS OR NUMBERS, ON THE CONTRACT DRAWINGS, DO NOT SCALE THE DRAWINGS TO DETERMINE DIMENSIONS.

THESE CONTRACT DRAWINGS CONTAIN DATA INTENDED SPECIFICALLY FOR THE NOTED PROJECT AND CLIENT. THEY ARE NOT INTENDED FOR USE ON EXTENSIONS OF THIS PROJECT OR FOR REUSE ON ANY OTHER PROJECT.

THE COPYING AND/OR MODIFICATION OF THIS DOCUMENT OR ANY PORTION THEREOF WITHOUT THE WRITTEN PERMISSION OF PAULUS, SOKOLOWSKI AND SARTOR, LLC IS PROHIBITED.

UNLESS THESE DRAWINGS ARE SPECIFICALLY DESIGNATED AS "CONSTRUCTION ISSUE", THESE DRAWINGS SHALL NOT BE USED FOR CONSTRUCTION OR IMPROVEMENTS DEPICTED HEREIN. CONTRACTORS SHALL NOTIFY THE DESIGN ENGINEER TO OBTAIN CONSTRUCTION DOCUMENTS.

COPYRIGHT 2019 PAULUS, SOKOLOWSKI AND SARTOR, LLC – ALL RIGHTS RESERVED.

JASON E. KASPER, P.E. 37067 LICENSED PROFESSIONAL ENGINEER
1/7/2019

CLIENT

PROJECT
NEW JERSEY
CENTER OF EXCELLENCE
1041 N.J.S.H. ROUTE 202/206
BLOCK 483, LOTS 17, 18 & 19

TOWNSHIP OF BRIDGEWATER
SOMERSET COUNTY, NEW JERSEY 08807

SHEET TITLE
OR/D ZONE
ANALYSIS PLAN

JOB NO.:	00488.0041
DATE:	05/09/2018
DRAWN:	TB/CY
CHECK:	CH/LAD
SCALE:	1" = 100'

SHEET NO. 3.01 OF 75

C-03.01

FILE NAME: P:\00488\00\TOWS\C-Civil\Plotting\C-03.01 OR/D ZONE ANALYSIS.dwg | C-03.01 | LAST EDIT: 5/7/2019 01:53:13 PM | CADIA Technologies

DEMOLITION LEGEND

- EXISTING ITEM/TREE TO BE REMOVED
- BUILDING, STRUCTURE TO BE REMOVED
- EXISTING PAVEMENT/CONCRETE TO BE REMOVED
- EXISTING TO BE REMOVED
- EXISTING CURB TO BE REMOVED
- EXISTING PIPE, UNDERGROUND UTILITIES OR UTILITY STRUCTURES TO BE REMOVED
- LIMIT OF DISTURBANCE

NORTH

EXISTING STORM SEWER HEADWALL AND UPSTREAM PIPES AND STRUCTURE TO BE REMOVED
EXISTING STORM SEWER PIPE AND INLET TO REMAIN
REMOVE EXISTING CURBS (TYP.)
REMOVE EXISTING CONCRETE SIDEWALK (TYP.)
COOLING TOWER TO REMAIN
REMOVED EXISTING STORM SEWER PIPE AND INLET
CAP EXISTING STORM SEWER PIPE AT INLET
LIMIT OF DISTURBANCE
EXISTING STORM SEWER PIPES AND STRUCTURES UPSTREAM FROM MANHOLE TO BE REMOVED.
LIMIT OF SIDEWALK TO BE REMOVED
EXISTING SANITARY SEWER TO REMAIN
REMOVE EXISTING LIGHT POLES (TYP.)
REMOVE EXISTING ASPHALT PARKING LOT (TYP.)
CAP EXISTING SANITARY SEWER LINE, UPSTREAM SANITARY SEWER PIPES AND STRUCTURES TO BE REMOVED.
PORTION OF EXISTING ELECTRIC LINE TO REMAIN
EXISTING STORM SEWER PIPE TO REMAIN
CAP EXISTING STORM SEWER AND REMOVE UPSTREAM PIPES AND STRUCTURES
EXISTING STORM SEWER STRUCTURE AND ALL UPSTREAM PIPES AND STRUCTURES TO BE REMOVED
EXISTING STORM SEWER UPSTREAM PIPES AND STRUCTURES TO REMAIN
PORTION OF EXISTING WATER LINE TO REMAIN
EXISTING GAS MAIN TO REMAIN AND BE PROTECTED
CAP EXISTING ELECTRIC LINE, ELECTRIC LINE TO EAST OF CAP TO BE REMOVED.
REMOVE EXISTING CURBS (TYP.)
CAP EXISTING SANITARY SEWER LINE, SANITARY SEWER LINE TO SOUTH OF CAP TO BE REMOVED.
EXISTING SANITARY SEWER TO REMAIN
CAP EXISTING WATER LINES, WATER LINES TO SOUTH AND EAST OF CAP TO BE REMOVED.
REMOVE HELICOPTER PAD AND ALL LIGHTS AROUND PAD
EXISTING GAS MAINS TO REMAIN AND BE PROTECTED
REMOVE EXISTING ASPHALT PARKING LOT (TYP.)
FIRE PONDS TO BE REMOVED
EXISTING GAS TO REMAIN
EXISTING SANITARY SEWER TO REMAIN
REMOVE EXISTING CONCRETE SIDEWALK (TYP.)
PORTION OF EXISTING ELECTRIC LINE TO REMAIN
CAP EXISTING ELECTRIC LINE, ELECTRIC LINE TO SOUTH OF CAP TO BE REMOVED.
PORTION OF EXISTING ELECTRIC AND TELEPHONE LINES TO REMAIN
PORTION OF EXISTING WATER LINE TO REMAIN
REMOVE EXISTING CONCRETE SIDEWALK (TYP.)
PORTION OF EXISTING ELECTRIC LINE TO REMAIN
PORTION OF EXISTING TELEPHONE LINE TO REMAIN
REMOVE EXISTING CONCRETE SIDEWALK (TYP.)
CAP EXISTING WATER LINE, WATER LINE TO EAST AND SOUTH OF CAP TO BE REMOVED.
LIMIT OF DISTURBANCE
REMOVE EXISTING LIGHT POLES (TYP.)
CAP EXISTING ELECTRIC AND TELEPHONE LINES, ELECTRIC AND TELEPHONE LINES TO THE EAST OF CAP TO BE REMOVED.
EXISTING ROADWAY TO REMAIN
EXISTING STORM SEWER INLET TO BE REMOVED, ALL UPSTREAM PIPES AND STRUCTURES TO BE REMOVED.
CAP EXISTING ELECTRIC AND TELEPHONE LINES, ELECTRIC, AND TELEPHONE LINES TO EAST OF CAP TO BE REMOVED.
CAP EXISTING SANITARY SEWER LINE, SANITARY SEWER TO EAST OF CAP TO BE REMOVED.
EXISTING BUILDING TO BE DEMOLISHED (TYP.)
EXISTING HEADWALL TO BE REMOVED (TYP.)
EXISTING TREES TO BE REMOVED (TYP.)
CAP EXISTING GAS LINE, GAS LINE TO EAST OF CAP TO BE REMOVED.
ALL EXISTING VEGETATION IN LIMIT OF DISTURBANCE TO BE REMOVED (TYP.)
EXISTING BUILDING TO BE DEMOLISHED (TYP.)
REMOVE EXISTING ASPHALT PARKING LOT (TYP.)
REMOVE EXISTING CONCRETE SIDEWALK (TYP.)
EXISTING ELECTRIC LINE TO BE REMOVED
EXISTING BUILDING TO BE DEMOLISHED (TYP.)
REMOVE EXISTING CONCRETE SIDEWALK (TYP.)
EXISTING GUARD HOUSE TO BE DEMOLISHED (TYP.)
REMOVE EXISTING LIGHT POLES (TYP.)
REMOVE EXISTING CURBS (TYP.)
REMOVE EXISTING CONCRETE SIDEWALK (TYP.)
EXISTING STORM SEWER INLET TO BE REMOVED. ALL UPSTREAM PIPES AND STRUCTURES TO BE REMOVED.
REMOVE EXISTING CURBS (TYP.)
REMOVE EXISTING LIGHT POLES (TYP.)
REMOVE EXISTING WOOD DECKS AND STAIRS (TYP.)
EXISTING BUILDING TO BE DEMOLISHED (TYP.)
EXISTING STORM SEWER MANHOLE TO BE REMOVED. ALL UPSTREAM PIPES AND STRUCTURES TO BE REMOVED.
REMOVE EXISTING CONCRETE SIDEWALK (TYP.)
REMOVE EXISTING ASPHALT PARKING LOT (TYP.)
EXISTING COMMUNICATION LINE FROM TELEPHONE POLE TO REMAIN
CAP EXISTING ELECTRIC AND TELEPHONE LINE AT UTILITY POLE. ELECTRIC AND TELEPHONE TO SOUTH OF UTILITY POLE TO BE REMOVED.
ALL EXISTING VEGETATION IN LIMIT OF DISTURBANCE TO BE REMOVED (TYP.)
EXISTING TREES TO BE REMOVED (TYP.)
REMOVE EXISTING ASPHALT PARKING LOT (TYP.)
EXISTING TREES TO BE REMOVED (TYP.)
LIMIT OF DISTURBANCE
EXISTING TREES TO BE REMOVED (TYP.)
REMOVE EXISTING CURBS (TYP.)
REMOVE EXISTING CURBS (TYP.)
REMOVE EXISTING LIGHT POLES (TYP.)
LIMIT OF DISTURBANCE
CAP EXISTING WATER LINE, WATER LINE TO WEST OF CAP TO BE REMOVED.
EXISTING PAVEMENT TO BE RESURFACED
EXISTING GUARD HOUSE TO BE DEMOLISHED (TYP.)
PORTION OF EXISTING GAS LINE TO REMAIN
EXISTING ROADWAY TO BE REMOVED
PORTION OF EXISTING WATER LINE TO REMAIN
CAP EXISTING WATER AND GAS LINE, WATER AND GAS LINE TO WEST OF CAP TO BE REMOVED.
LIMIT OF DISTURBANCE
EXISTING TELEPHONE LINE TO BE REMOVED
EXISTING FOUNDATION/FOOTING TO BE REMOVED

NOTE:
ALL VEGETATION, PAVEMENT, CURBING, AND STRUCTURES WITHIN THE LIMIT OF DISTURBANCE TO BE COMPLETELY REMOVED UNLESS SPECIFICALLY NOTED OTHERWISE.

GRAPHIC SCALE
60 0 30 60 120
(IN FEET)
1 inch = 60 ft.

REV. / ISSUE	DATE	DESCRIPTION
1	11/12/18	REVISED PER BOARD COMMENTS
2	1/07/19	REVISED PER BOARD COMMENTS

CONSULTANT

ORIENTATION / KEY PLAN

PAULUS, SOKOLOWSKI AND SARTOR, LLC
67A MOUNTAIN BLVD EXT.
P.O. BOX 4039
WARREN, NEW JERSEY 07059
PHONE: (732) 560-9700

CERTIFICATE OF AUTHORIZATION NO. 24GA28032700

ALL DIMENSIONS MUST BE VERIFIED BY THE CONTRACTOR. NOTIFY PAULUS, SOKOLOWSKI AND SARTOR, LLC, OF ANY CONFLICTS, ERRORS, AMBIGUITIES OR DISCREPANCIES IN THE CONTRACT DRAWINGS OR SPECIFICATIONS BEFORE PROCEEDING WITH CONSTRUCTION.

ALL DIMENSIONS SHALL BE AS NOTED IN WORDS OR NUMBERS ON THE CONTRACT DRAWINGS. DO NOT SCALE THE DRAWINGS TO DETERMINE DIMENSIONS.

THESE CONTRACT DRAWINGS CONTAIN DATA INTENDED SPECIFICALLY FOR THE NOTED PROJECT AND CLIENT. THEY ARE NOT INTENDED FOR USE ON EXTENSIONS OF THIS PROJECT OR FOR REUSE ON ANY OTHER PROJECT.

THE COPYING AND/OR MODIFICATION OF THIS DOCUMENT OR ANY PORTION THEREOF WITHOUT THE WRITTEN PERMISSION OF PAULUS, SOKOLOWSKI AND SARTOR, LLC IS PROHIBITED.

UNLESS THESE DRAWINGS ARE SPECIFICALLY DESIGNATED AS "CONSTRUCTION ISSUE", THEY ARE NOT TO BE USED FOR CONSTRUCTION PURPOSES. PRIOR TO BIDDING OR NEGOTIATION, CONTRACTORS SHALL NOTIFY THE DESIGN ENGINEER TO OBTAIN CONSTRUCTION DOCUMENTS.

COPYRIGHT 2018 PAULUS, SOKOLOWSKI AND SARTOR, LLC – ALL RIGHTS RESERVED.



1/7/2019

CLIENT

PROJECT

NEW JERSEY CENTER OF EXCELLENCE

1041 N.J.S.H. ROUTE 202/206
BLOCK 483, LOTS 17, 18 & 19

TOWNSHIP OF BRIDGEWATER
SOMERSET COUNTY, NEW JERSEY 08807

SHEET TITLE

EXISTING CONDITIONS AND DEMOLITION PLAN

JOB NO.:	00488.0041
DATE:	05/09/2018
DRAWN:	TB/PP
CHECK:	CH/LAD
SCALE:	1" = 60'

SHEET NO. 4 OF 75

C-04

FILENAME: P:\00488\01 Drafting\Cad\Plans\gpr\C04 EXISTING CONDITIONS AND DEMOLITION PLAN.dwg CD4 LAST EDIT: 01/07/2019 - 01:06:47 PM LOGIN: tbenninger

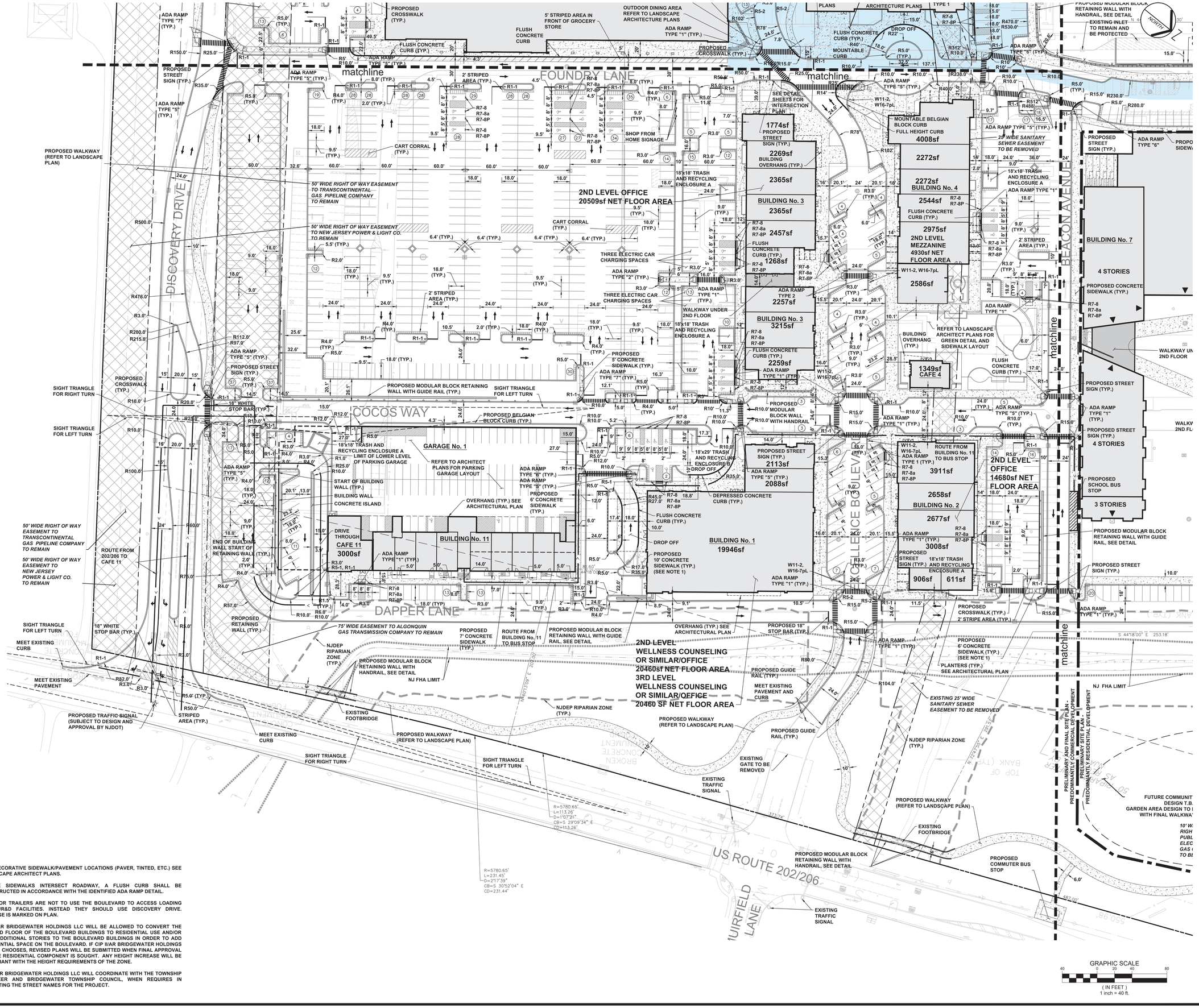

NOTE:

1. FOR DECORATIVE SIDEWALK/PAVEMENT LOCATIONS (PAVER, TINTED, ETC.) SEE LANDSCAPE ARCHITECT PLANS.
2. WHERE SIDEWALKS INTERSECT ROADWAY, A FLUSH CURB SHALL BE CONSTRUCTED IN ACCORDANCE WITH THE IDENTIFIED ADA RAMP DETAIL.
3. TRACTOR TRAILERS ARE NOT TO USE THE BOULEVARD TO ACCESS LOADING AREAS/R&D FACILITIES. INSTEAD THEY SHOULD USE DISCOVERY DRIVE. SIGNAGE IS MARKED ON PLAN.
4. CIP II/AR BRIDGEWATER HOLDINGS LLC WILL BE ALLOWED TO CONVERT THE SECOND FLOOR OF THE BOULEVARD BUILDINGS TO RESIDENTIAL USE AND/OR ADD ADDITIONAL STORIES TO THE BOULEVARD BUILDINGS IN ORDER TO ADD RESIDENTIAL SPACE ON THE BOULEVARD. IF CIP II/AR BRIDGEWATER HOLDINGS LLC SO CHOOSES, REVISED PLANS WILL BE SUBMITTED WHEN FINAL APPROVAL ON THE RESIDENTIAL COMPONENT IS SOUGHT. ANY HEIGHT INCREASE WILL BE COMPLIANT WITH THE HEIGHT REQUIREMENTS OF THE ZONE.
5. CIP II/AR BRIDGEWATER HOLDINGS LLC WILL COORDINATE WITH THE TOWNSHIP ENGINEER AND BRIDGEWATER TOWNSHIP COUNCIL, WHEN REQUIRES IN SELECTING THE STREET NAMES FOR THE PROJECT.

REV. / ISSUE	DATE	DESCRIPTION
1	8/16/18	NEW RESIDENTIAL BUILDING
2	11/12/18	REVISED PER BOARD COMMENTS
3	1/07/19	REVISED PER BOARD COMMENTS

CONSULTANT

ORIENTATION / KEY PLAN

PAULUS, SOKOLOWSKI AND SARTOR, LLC
67A MOUNTAIN BLVD EXT.
P.O. BOX 4039
WARREN, NEW JERSEY 07059
PHONE: (732) 560-9700

CERTIFICATE OF AUTHORIZATION NO. 24GA28032700

ALL DIMENSIONS MUST BE VERIFIED BY THE CONTRACTOR. NOTIFY PAULUS, SOKOLOWSKI AND SARTOR, LLC OF ANY DISCREPANCIES BETWEEN THE CONTRACT DRAWINGS AND THE CONTRACT SPECIFICATIONS BEFORE PROCEEDING WITH CONSTRUCTION.

ALL DIMENSIONS SHALL BE AS NOTED IN WORDS OR NUMBERS ON THE CONTRACT DRAWINGS. DO NOT SCALE THE DRAWINGS TO DETERMINE DIMENSIONS.

THESE CONTRACT DRAWINGS CONTAIN DATA INTENDED SPECIFICALLY FOR THE NOTED PROJECT AND CLIENT. THEY ARE NOT INTENDED FOR USE ON EXTENSIONS OF THIS PROJECT OR FOR REUSE ON ANY OTHER PROJECT.

THE COPYING AND/OR MODIFICATION OF THIS DOCUMENT OR ANY PORTION THEREOF WITHOUT THE WRITTEN PERMISSION OF PAULUS, SOKOLOWSKI AND SARTOR, LLC. IS PROHIBITED.

UNLESS THESE DRAWINGS ARE SPECIFICALLY DESIGNATED AS "CONSTRUCTION ISSUE", THESE DRAWINGS SHALL NOT BE USED FOR CONSTRUCTION OF IMPROVEMENTS DEPICTED HEREIN. CONTRACTORS SHALL NOTIFY THE DESIGN ENGINEER TO OBTAIN CONSTRUCTION DOCUMENTS.

COPYRIGHT 2019 PAULUS, SOKOLOWSKI AND SARTOR, LLC. – ALL RIGHTS RESERVED.



1/7/2019

CLIENT

PROJECT

NEW JERSEY
CENTER OF EXCELLENCE

1041 N.J.S.H. ROUTE 202/206
BLOCK 483, LOTS 17, 18 & 19

TOWNSHIP OF BRIDGEWATER
SOMERSET COUNTY, NEW JERSEY 08807

SHEET TITLE

SITE PLAN
(SHEET 1 OF 5)

JOB NO.:	00488.0041
DATE:	05/09/2018
DRAWN:	TB/CY
CHECK:	CH/LAD
SCALE:	1" = 40'

SHEET NO. 5 OF 75

C-05

FILENAME: P:\00488\0041\DWG\CAD\Plans\C-05.dwg LAST EDIT: 01/07/2019 11:13:38 PM LOGIN: tbenyak

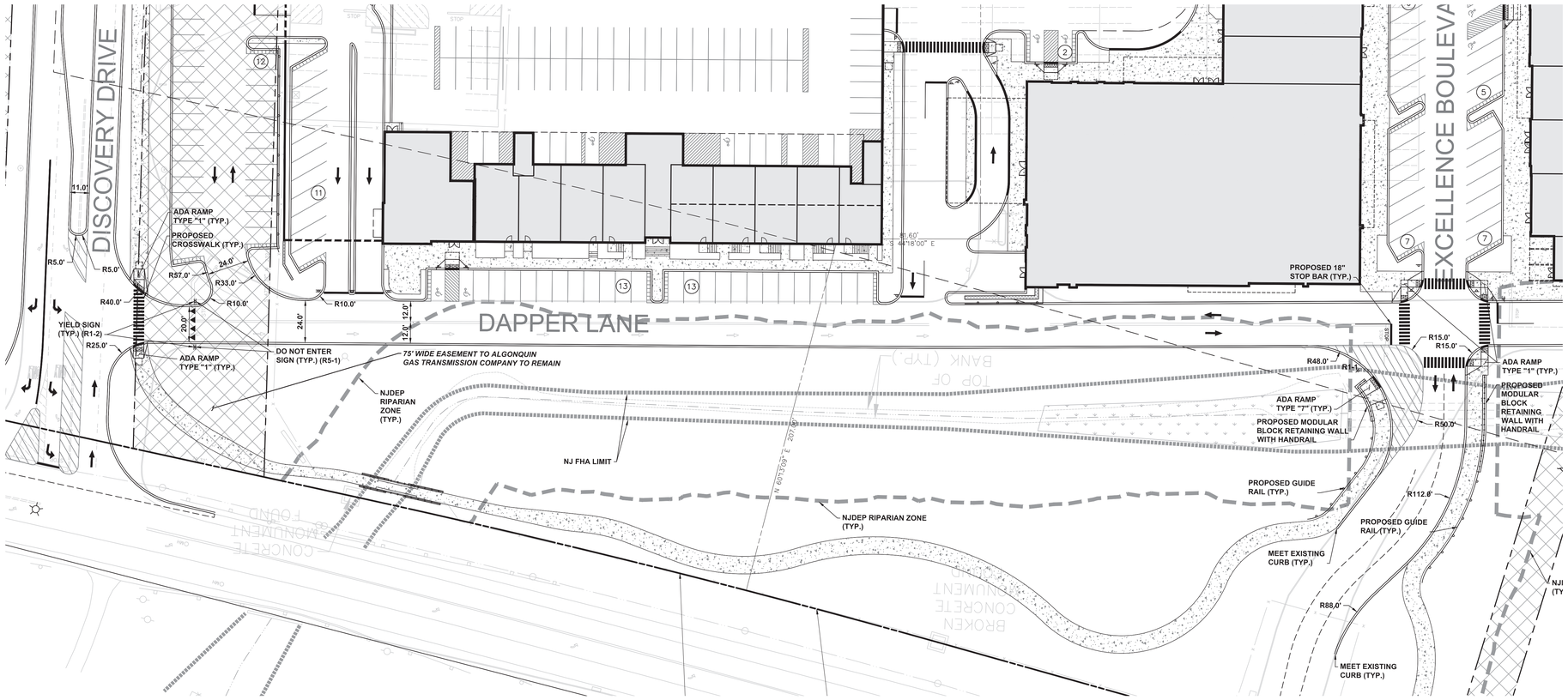

NOTE:

1. FOR DECORATIVE SIDEWALK/PAVEMENT LOCATIONS (PAVER, TINTED, ETC.) SEE LANDSCAPE ARCHITECT PLANS.
2. WHERE SIDEWALKS INTERSECT ROADWAY, A FLUSH CURB SHALL BE CONSTRUCTED IN ACCORDANCE WITH THE IDENTIFIED ADA RAMP DETAIL.
3. TRACTOR TRAILERS ARE NOT TO USE THE BOULEVARD TO ACCESS LOADING AREAS/R&D FACILITIES. INSTEAD THEY SHOULD USE DISCOVERY. SIGNAGE IS MARKED ON PLAN.
4. CIP II/AR BRIDGEWATER HOLDINGS LLC WILL BE ALLOWED TO CONVERT THE SECOND FLOOR OF THE BOULEVARD BUILDINGS TO RESIDENTIAL USE AND/OR ADD ADDITIONAL STORIES TO THE BOULEVARD BUILDINGS IN ORDER TO ADD RESIDENTIAL SPACE ON THE BOULEVARD. IF CIP II/AR BRIDGEWATER HOLDINGS LLC SO CHOOSES, REVISED PLANS WILL BE SUBMITTED WHEN FINAL APPROVAL ON THE RESIDENTIAL COMPONENT IS SOUGHT. ANY HEIGHT INCREASE WILL BE COMPLIANT WITH THE HEIGHT REQUIREMENTS OF THE ZONE.
5. CIP II/AR BRIDGEWATER HOLDINGS LLC WILL COORDINATE WITH THE TOWNSHIP ENGINEER AND BRIDGEWATER TOWNSHIP COUNCIL, WHEN REQUIRES IN SELECTING THE STREET NAMES FOR THE PROJECT.

NOTES:

1. SITE PLAN (C-05.01) AND GRADING PLAN (C-08.01) SHOWS ALTERNATE DAPPER LANE/ DISCOVERY DRIVE INTERSECTION TO ALLOW ACCESS FROM DISCOVERY DRIVE TO THE TRAFFIC LIGHT AT STATE HIGHWAY 202/206 AND EXCELLENCE BOULEVARD INTERSECTION, IF THE NEW TRAFFIC LIGHT AT STATE HIGHWAY 202/206 AND DISCOVERY DRIVE INTERSECTION IS NOT CONSTRUCTED AND THE TOWNSHIP COUNCIL GRANTS A WAIVER.
2. SEE SHEET C-05 FOR SITE PLAN INFORMATION OUTSIDE OF ALTERNATE INTERSECTION IMPROVEMENTS.

GRAPHIC SCALE
30 0 15 30 60
(IN FEET)
1 inch = 30 ft.

REV. / ISSUE	DATE	DESCRIPTION

CONSULTANT

ORIENTATION / KEY PLAN

PAULUS, SOKOLOWSKI AND SARTOR, LLC

67A MOUNTAIN BLVD EXT.
P.O. BOX 4039
WARREN, NEW JERSEY 07059
PHONE: (732) 560-9700

CERTIFICATE OF AUTHORIZATION NO. 24GA28032700

ALL DIMENSIONS MUST BE VERIFIED BY THE CONTRACTOR. NOTIFY PAULUS, SOKOLOWSKI AND SARTOR, LLC OF CONFLICTS, ERRORS, OR AMBIGUITIES OR DISCREPANCIES IN THE CONTRACT DRAWINGS OR SPECIFICATIONS BEFORE PROCEEDING WITH CONSTRUCTION.

ALL DIMENSIONS SHALL BE AS NOTED IN WORDS OF NUMBERS ON THE CONTRACT DRAWINGS. DO NOT SCALE DRAWINGS. USE FIGURED DIMENSIONS.

WATER CIRCULATION DRAWING CONTAIN DATA INTENDED SPECIFICALLY FOR THE NOTED PROJECT AND CLIENT. THEY ARE NOT INTENDED FOR USE ON EXTENSIONS OF THIS PROJECT OR FOR REUSE ON ANY OTHER PROJECTS.

THE COPYING AND/OR MODIFICATION OF THIS DOCUMENT OR ANY PORTION THEREOF WITHOUT THE WRITTEN PERMISSION OF PAULUS, SOKOLOWSKI AND SARTOR, LLC IS PROHIBITED.

UNLESS THESE DRAWINGS ARE SPECIFICALLY DESIGNATED AS "CONSTRUCTION ISSUE", THESE DRAWINGS SHALL NOT BE USED FOR CONSTRUCTION OR IMPROVEMENTS DEPICTED HEREON. CONTRACTORS SHALL NOTIFY THE DESIGN ENGINEER TO OBTAIN CONSTRUCTION DOCUMENTS.

COPYRIGHT 2019 PAULUS, SOKOLOWSKI AND SARTOR, LLC. – ALL RIGHTS RESERVED.

STATE OF NEW JERSEY
JASON H. GAIS
37067
LICENSED PROFESSIONAL ENGINEER

1/7/2019

CLIENT

PROJECT

NEW JERSEY
CENTER OF EXCELLENCE

1041 N.J.S.H. ROUTE 202/206
BLOCK 483, LOTS 17, 18 & 19

TOWNSHIP OF BRIDGEWATER
SOMERSET COUNTY, NEW JERSEY 08807

SHEET TITLE

ALTERNATE
INTERSECTION
SITE PLAN
(SHEET 2 OF 5)

JOB NO.:	00488.0041
DATE:	01/07/2019
DRAWN:	TB/CY
CHECK:	CH/LAD
SCALE:	1" = 30'

SHEET NO. 5.01 OF 75

C-05.01

README - P:\00488\Work\Civil\Dwg\C05\01 SITE PLAN.dwg, C-05.01 - ALT EXIT - EXCESS, 1/8/2019 1:52:31 PM, CORY Bernhardt

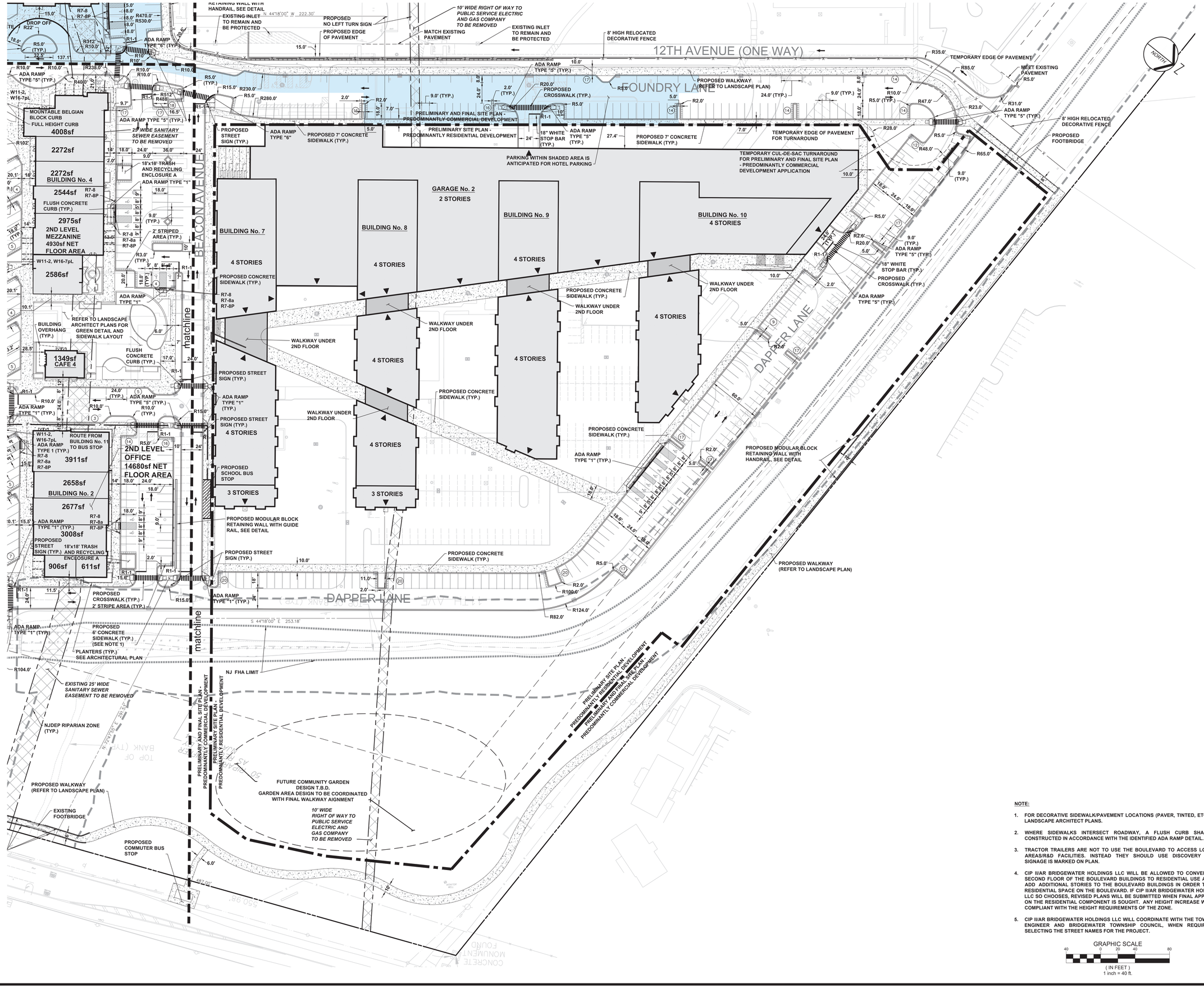

REV. / ISSUE	DATE	DESCRIPTION
1	11/12/18	REVISED PER BOARD COMMENTS
2	1/07/19	REVISED PER BOARD COMMENTS

CONSULTANT

ORIENTATION / KEY PLAN

NOTE:

1. FOR DECORATIVE SIDEWALK/PAVEMENT LOCATIONS (PAVER, TINTED, ETC.) SEE LANDSCAPE ARCHITECT PLANS.
2. WHERE SIDEWALKS INTERSECT ROADWAY, A FLUSH CURB SHALL BE CONSTRUCTED IN ACCORDANCE WITH THE IDENTIFIED ADA RAMP DETAIL.
3. TRACTOR TRAILERS ARE NOT TO USE THE BOULEVARD TO ACCESS LOADING AREAS/R&D FACILITIES. INSTEAD THEY SHOULD USE DISCOVERY DRIVE. SIGNAGE IS MARKED ON PLAN.
4. CIP II/AR BRIDGEWATER HOLDINGS LLC WILL BE ALLOWED TO CONVERT THE SECOND FLOOR OF THE BOULEVARD BUILDINGS TO RESIDENTIAL USE AND/OR ADD ADDITIONAL STORIES TO THE BOULEVARD BUILDINGS IN ORDER TO ADD RESIDENTIAL SPACE ON THE BOULEVARD. IF CIP II/AR BRIDGEWATER HOLDINGS LLC SO CHOOSES, REVISED PLANS WILL BE SUBMITTED WHEN FINAL APPROVAL ON THE RESIDENTIAL COMPONENT IS SOUGHT. ANY HEIGHT INCREASE WILL BE COMPLIANT WITH THE HEIGHT REQUIREMENTS OF THE ZONE.
5. CIP II/AR BRIDGEWATER HOLDINGS LLC WILL COORDINATE WITH THE TOWNSHIP ENGINEER AND BRIDGEWATER TOWNSHIP COUNCIL, WHEN REQUIRES IN SELECTING THE STREET NAMES FOR THE PROJECT.

GRAPHIC SCALE
40 0 20 40 80
(IN FEET)
1 inch = 40 ft.

PAULUS, SOKOLOWSKI AND SARTOR, LLC
67A MOUNTAIN BLVD EXT.
P.O. BOX 4039
WARREN, NEW JERSEY 07059
PHONE: (732) 560-9700
CERTIFICATE OF AUTHORIZATION NO. 24GA28032700

ALL DIMENSIONS MUST BE VERIFIED BY THE CONTRACTOR. NOTIFY PAULUS, SOKOLOWSKI AND SARTOR, LLC. OF ANY CONFLICTS, ERRORS, AMBIGUITIES OR DISCREPANCIES IN THE CONTRACT DRAWINGS OR SPECIFICATIONS BEFORE PROCEEDING WITH CONSTRUCTION.

ALL DIMENSIONS SHALL BE AS NOTED IN WORDS OR NUMBERS ON THE CONTRACT DRAWINGS. DO NOT SCALE THE DRAWINGS TO DETERMINE DIMENSIONS.

THESE CONTRACT DRAWINGS CONTAIN DATA INTENDED SPECIFICALLY FOR THE NOTED PROJECT. THEY ARE NOT TO BE USED IN WHOLE OR IN PART FOR USE ON EXTENSIONS OF THIS PROJECT OR FOR REUSE ON ANY OTHER PROJECT.

THE COPYING AND/OR MODIFICATION OF THIS DOCUMENT OR ANY PORTION THEREOF WITHOUT THE WRITTEN PERMISSION OF PAULUS, SOKOLOWSKI AND SARTOR, LLC. IS PROHIBITED.

UNLESS THESE DRAWINGS ARE SPECIFICALLY DESIGNATED AS "CONSTRUCTION ISSUE", THESE DRAWINGS SHALL NOT BE USED FOR CONSTRUCTION OR IMPROVEMENTS DEPICTED HEREIN. CONTRACTORS SHALL NOTIFY THE DESIGN ENGINEER TO OBTAIN CONSTRUCTION DOCUMENTS.

COPYRIGHT 2019 PAULUS, SOKOLOWSKI AND SARTOR, LLC – ALL RIGHTS RESERVED.

LICENSED PROFESSIONAL ENGINEER
37067
1/7/2019

CLIENT

PROJECT
NEW JERSEY
CENTER OF EXCELLENCE
1041 N.J.S.H. ROUTE 202/206
BLOCK 483, LOTS 17, 18 & 19
TOWNSHIP OF BRIDGEWATER
SOMERSET COUNTY, NEW JERSEY 08807

SHEET TITLE
SITE PLAN
(SHEET 3 OF 5)

JOB NO.:	00488.0041
DATE:	05/09/2018
DRAWN:	TB/CY
CHECK:	CH/LAD
SCALE:	1" = 40'

SHEET NO. 6 OF 75

C-06

FILENAME: P:\00488\0041\PROD\CAD\Planset\C-06-SITE PLAN.dwg LAST SAVE: 1/7/2019 11:19:54 PM LOGIN: tbarney

REV. / ISSUE	DATE	DESCRIPTION
1	8/16/18	NEW RESIDENTIAL BUILDING
2	11/12/18	REVISED PER BOARD COMMENTS
3	1/07/19	REVISED PER BOARD COMMENTS

NOTE:

1. FOR DECORATIVE SIDEWALK/PAVEMENT LOCATIONS (PAVER, TINTED, ETC.) SEE LANDSCAPE ARCHITECT PLANS.
2. WHERE SIDEWALKS INTERSECT ROADWAY, A FLUSH CURB SHALL BE CONSTRUCTED IN ACCORDANCE WITH THE IDENTIFIED ADA RAMP DETAIL.
3. TRACTOR TRAILERS ARE NOT TO USE THE BOULEVARD TO ACCESS LOADING AREAS/R&D FACILITIES. INSTEAD THEY SHOULD USE DISCOVERY DRIVE. SIGNAGE IS MARKED ON PLAN.
4. CIP II/AR BRIDGEWATER HOLDINGS LLC WILL BE ALLOWED TO CONVERT THE SECOND FLOOR OF THE BOULEVARD BUILDINGS TO RESIDENTIAL USE AND/OR ADD ADDITIONAL STORIES TO THE BOULEVARD BUILDINGS IN ORDER TO ADD RESIDENTIAL SPACE ON THE BOULEVARD. IF CIP II/AR BRIDGEWATER HOLDINGS LLC SO CHOOSES, REVISED PLANS WILL BE SUBMITTED WHEN FINAL APPROVAL ON THE RESIDENTIAL COMPONENT IS SOUGHT. ANY HEIGHT INCREASE WILL BE COMPLIANT WITH THE HEIGHT REQUIREMENTS OF THE ZONE.
5. CIP II/AR BRIDGEWATER HOLDINGS LLC WILL COORDINATE WITH THE TOWNSHIP ENGINEER AND BRIDGEWATER TOWNSHIP COUNCIL, WHEN REQUIRES IN SELECTING THE STREET NAMES FOR THE PROJECT.

CONSULTANT

ORIENTATION / KEY PLAN

PAULUS, SOKOLOWSKI AND SARTOR, LLC

67A MOUNTAIN BLVD EXT.
P.O. BOX 4039
WARREN, NEW JERSEY 07059
PHONE: (732) 560-9700

CERTIFICATE OF AUTHORIZATION NO. 24GA28032700

ALL DIMENSIONS MUST BE VERIFIED BY THE CONTRACTOR. NOTIFY PAULUS, SOKOLOWSKI AND SARTOR, LLC OF ANY DISCREPANCIES OR OMISSIONS FOUND IN THE CONTRACT DRAWINGS OR SPECIFICATIONS BEFORE PROCEEDING WITH CONSTRUCTION.

ALL DIMENSIONS SHALL BE AS NOTED IN WORDS OR NUMBERS ON THE CONTRACT DRAWINGS. DO NOT SCALE THE DRAWINGS TO DETERMINE DIMENSIONS.

THESE CONTRACT DRAWINGS CONTAIN DATA INTENDED SPECIFICALLY FOR THE NOTED PROJECT AND SUBMIT, THEY ARE NOT INTENDED FOR USE ON EXTENSIONS OF THIS PROJECT OR FOR REUSE ON ANY OTHER PROJECT.

THE COPYING AND/OR MODIFICATION OF THIS DOCUMENT OR ANY PORTION THEREOF WITHOUT THE WRITTEN PERMISSION OF PAULUS, SOKOLOWSKI AND SARTOR, LLC. IS PROHIBITED.

UNLESS THESE DRAWINGS ARE SPECIFICALLY DESIGNATED AS "CONSTRUCTION ISSUE", THESE DRAWINGS SHALL NOT BE USED FOR CONSTRUCTION OR IMPLEMENTATION PURPOSES. CONTRACTORS SHALL NOTIFY THE DESIGN ENGINEER TO OBTAIN CONSTRUCTION DOCUMENTS.

COPYRIGHT 2019 PAULUS, SOKOLOWSKI AND SARTOR, LLC. – ALL RIGHTS RESERVED.

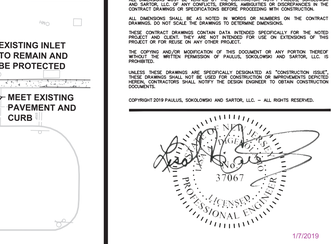

1/7/2019

CLIENT

PROJECT

NEW JERSEY CENTER OF EXCELLENCE

1041 N.J.S.H. ROUTE 202/206
BLOCK 483, LOTS 17, 18 & 19

TOWNSHIP OF BRIDGEWATER
SOMERSET COUNTY, NEW JERSEY 08807

SHEET TITLE

SITE PLAN (SHEET 4 OF 5)

JOB NO.:	00488.0041
DATE:	05/09/2018
DRAWN:	TB/CY
CHECK:	CH/LAD
SCALE:	1" = 40'
SHEET NO.	7 OF 75

C-07

GRAPHIC SCALE
40 0 20 40 80
(IN FEET)
1 inch = 40 ft.

50' RIPARIAN BUFFER AS REQUIRED BY NJAC 7:13-4

FILENAME: P:\00488\0041\WORK\Civil\Image\C-07.dgn 8/31/18 3:45:48 PM CDOH Tech\gaf6

REV. / ISSUE	DATE	DESCRIPTION
1	1/07/19	REVISED PER BOARD COMMENTS

NOTE:

1. FOR DECORATIVE SIDEWALK/PAVEMENT LOCATIONS (PAVER, TINTED, ETC.) SEE LANDSCAPE ARCHITECT PLANS.
2. WHERE SIDEWALKS INTERSECT ROADWAY, A FLUSH CURB SHALL BE CONSTRUCTED IN ACCORDANCE WITH THE IDENTIFIED ADA RAMP DETAIL.
3. TRACTOR TRAILERS ARE NOT TO USE THE BOULEVARD TO ACCESS LOADING AREAS/R&D FACILITIES. INSTEAD THEY SHOULD USE DISCOVERY DRIVE. SIGNAGE IS MARKED ON PLAN.
4. CIP II/AR BRIDGEWATER HOLDINGS LLC WILL BE ALLOWED TO CONVERT THE SECOND FLOOR OF THE BOULEVARD BUILDINGS TO RESIDENTIAL USE AND/OR ADD ADDITIONAL STORIES TO THE BOULEVARD BUILDINGS IN ORDER TO ADD RESIDENTIAL SPACE ON THE BOULEVARD. IF CIP II/AR BRIDGEWATER HOLDINGS LLC SO CHOOSES, REVISED PLANS WILL BE SUBMITTED WHEN FINAL APPROVAL ON THE RESIDENTIAL COMPONENT IS SOUGHT. ANY HEIGHT INCREASE WILL BE COMPLIANT WITH THE HEIGHT REQUIREMENTS OF THE ZONE.
5. CIP II/AR BRIDGEWATER HOLDINGS LLC WILL COORDINATE WITH THE TOWNSHIP ENGINEER AND BRIDGEWATER TOWNSHIP COUNCIL, WHEN REQUIRES IN SELECTING THE STREET NAMES FOR THE PROJECT.

CONSULTANT

ORIENTATION / KEY PLAN

PAULUS, SOKOLOWSKI AND SARTOR, LLC

67A MOUNTAIN BLVD EXT.
P.O. BOX 4039
WARREN, NEW JERSEY 07059
PHONE: (732) 560-9700

CERTIFICATE OF AUTHORIZATION NO. 24GA28032700

ALL DIMENSIONS MUST BE VERIFIED BY THE CONTRACTOR. NOTIFY PAULUS, SOKOLOWSKI AND SARTOR, LLC OF ANY DISCREPANCIES BETWEEN THE FIELD CONDITIONS AND THE CONTRACT DRAWINGS OR SPECIFICATIONS BEFORE PROCEEDING WITH CONSTRUCTION.

ALL DIMENSIONS SHALL BE AS NOTED IN WORDS OR NUMBERS ON THE CONTRACT DRAWINGS. DO NOT SCALE THE DRAWINGS TO DETERMINE DIMENSIONS.

THESE CONTRACT DRAWINGS CONTAIN DATA INTENDED SPECIFICALLY FOR THE NOTED PROJECT AND CLIENT. THEY ARE NOT INTENDED FOR USE ON EXTENSIONS OF THIS PROJECT OR FOR REUSE ON ANY OTHER PROJECT.

THE COPYING AND/OR MODIFICATION OF THIS DOCUMENT OR ANY PORTION THEREOF WITHOUT THE WRITTEN PERMISSION OF PAULUS, SOKOLOWSKI AND SARTOR, LLC. IS PROHIBITED.

UNLESS THESE DRAWINGS ARE SPECIFICALLY DESIGNATED AS "CONSTRUCTION ISSUE", THESE DRAWINGS SHALL NOT BE USED FOR CONSTRUCTION OR IMPROVEMENTS DEPICTED HEREIN. CONTRACTORS SHALL NOTIFY THE DESIGN ENGINEER TO OBTAIN CONSTRUCTION DOCUMENTS.

COPYRIGHT 2019 PAULUS, SOKOLOWSKI AND SARTOR, LLC. – ALL RIGHTS RESERVED.

NEW JERSEY LICENSED PROFESSIONAL ENGINEER 37067

1/7/2019

CLIENT

PROJECT

NEW JERSEY
CENTER OF EXCELLENCE

1041 N.J.S.H. ROUTE 202/206
BLOCK 483, LOTS 17, 18 & 19

TOWNSHIP OF BRIDGEWATER
SOMERSET COUNTY, NEW JERSEY 08807

SHEET TITLE

SITE PLAN
(SHEET 5 OF 5)

JOB NO.:	00488.0041
DATE:	11/12/2018
DRAWN:	TB/CY
CHECK:	CH/LAD
SCALE:	1" = 40'

SHEET NO. 7.01 OF 75

C-07.01

GRAPHIC SCALE
40 0 20 40 80
(IN FEET)
1 inch = 40 ft.

MATCHLINE SHEET 7.01
MATCHLINE SHEET 70

PROPOSED LOCATION FOR FUTURE FLAG POLE
WETLANDS
WETLANDS 50' BUFFER (TYP.)
NJDEP RIPARIAN ZONE (TYP.)
50' WIDE RIGHT OF WAY EASEMENT TO TRANSCONTINENTAL GAS PIPELINE COMPANY TO REMAIN
50' WIDE RIGHT OF WAY EASEMENT TO NEW JERSEY POWER & LIGHT CO. TO REMAIN
75' WIDE EASEMENT TO ALGONQUIN GAS TRANSMISSION COMPANY TO REMAIN
PROPOSED 6' WIDE BLUESTONE DUST WALKWAY(REFER TO LANDSCAPE PLAN)
PROPOSED WALKWAY (REFER TO LANDSCAPE PLAN)
PROPOSED 6' WIDE BLUESTONE DUST WALKWAY(REFER TO LANDSCAPE PLAN)
NJ FHA LIMIT
8' HIGH BLACK VINYL CHAIN LINK FENCE
25' SANITARY SEWER EASEMENT TO REMAIN
END OF 8' HIGH RELOCATED DECORATIVE FENCE, START OF 8' HIGH BLACK VINYL CHAIN LINK FENCE
2' STRIPED AREA (TYP.)
PROPOSED BELGIAN BLOCK CURB (TYP.)
MEET EXISTING PAVEMENT AND CURB
MEET EXISTING SIDEWALK
ADA RAMP TYPE "6" (TYP.)
FLUSH CONCRETE CURB (TYP.)
ADA RAMP TYPE "5" (TYP.)
8' HIGH RELOCATED DECORATIVE FENCE
PROPOSED 10' CONCRETE SIDEWALK (TYP.) (SEE NOTE 1)
PROPOSED SPLIT RAIL FENCE ALONG LOOP WALKWAY
PROPOSED CROSSWALK (TYP.)
EXISTING INLET TO REMAIN AND BE PROTECTED
MEET EXISTING PAVEMENT AND CURB
MEET EXISTING CURB
ADA RAMP TYPE "7" (TYP.)
PROPOSED BELGIAN BLOCK CURB (TYP.)
PROPOSED 6' CONCRETE SIDEWALK (TYP.) (SEE NOTE 1)
PROPOSED 7' CONCRETE SIDEWALK (TYP.) (SEE NOTE 1)
STATE OPEN WATER (TYP.)
NJDEP RIPARIAN ZONE (TYP.)
STORMWATER MANAGEMENT BASIN
W.Q. SAND FILTER
PROPOSED GABION BASKET WALL
PROPOSED MODULAR BLOCK RETAINING WALL WITH HANDRAIL, SEE DETAIL
10' STABILIZED BASIN ACCESS ROAD
GUARD BOOTH AND SECURITY LIFT GATE
18" WHITE STOP BAR (TYP.)
ARCHITECTURAL WALL REFER TO LANDSCAPE ARCHITECT PLAN
10' STABILIZED BASIN ACCESS ROAD DEPRESSED CONCRETE CURB
PROPOSED CROSSWALK (TYP.)
PROPOSED CROSSWALK (TYP.)
ADA RAMP TYPE "5" (TYP.)
MANGATE
MAILBOX PAD
EXISTING INLET TO REMAIN AND BE PROTECTED
MEET EXISTING CURB
ADA RAMP TYPE "7" (TYP.)
ARCHITECTURAL WALL REFER TO LANDSCAPE ARCHITECT PLAN
EXISTING INLET TO REMAIN AND BE PROTECTED
MEET EXISTING SIDEWALK
END NEW PAVEMENT AND CURB
PROPOSED 6' CONCRETE
DISCOVERY DR.
3RD STREET
N. 45°42'00" E. 2075.40'
N. 45°42'00" E. 398.16'
S 44°18'00" E 220.57'
660.31'

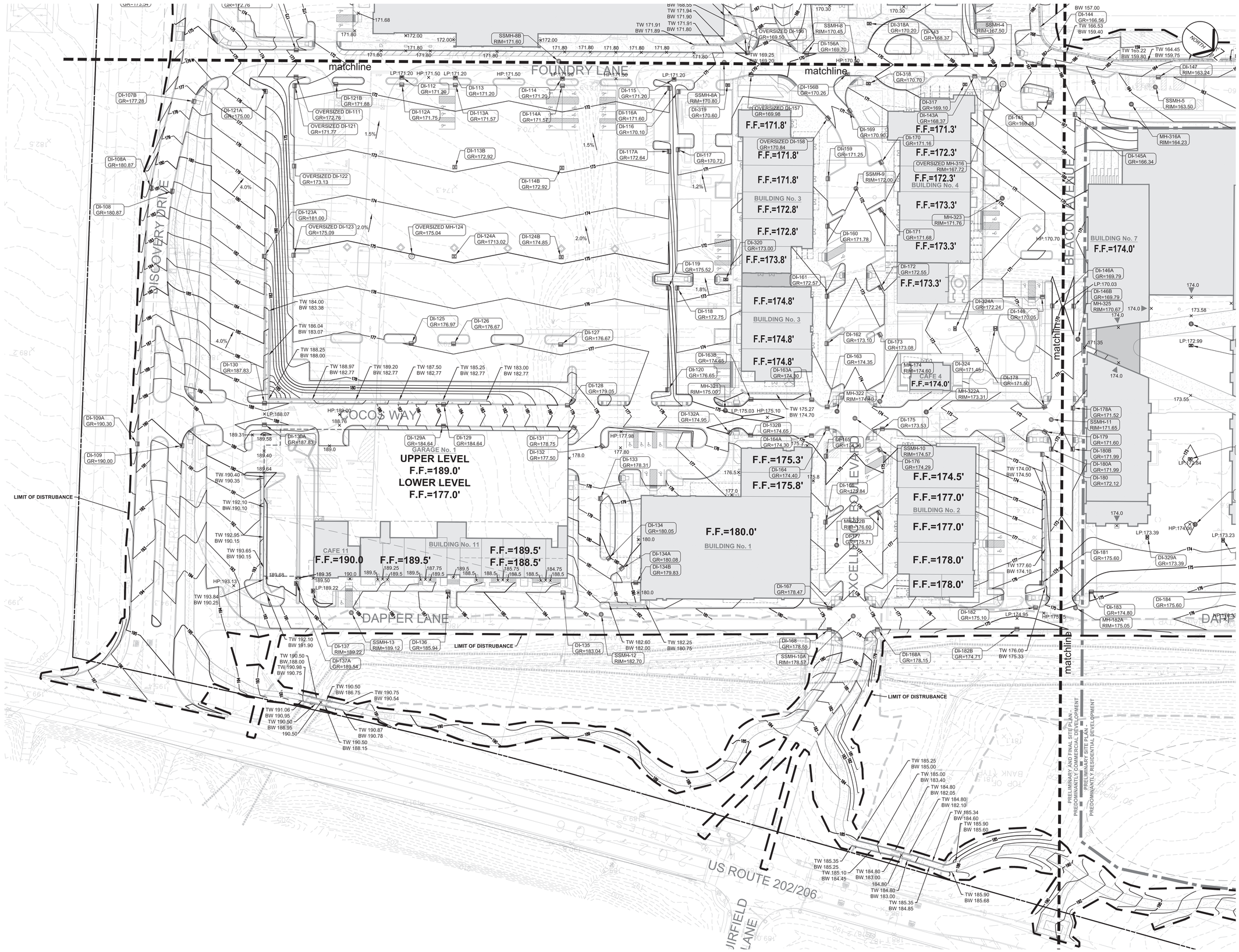

NOTE: STEEP SLOPE AND HILLSIDE AREAS TO BE DISTURBED AS PART OF THIS PROJECT ARE MAN MADE SLOPES LOCATED IN PREVIOUSLY DEVELOPED AREAS MAINTAINED BY THE OWNER.

GRAPHIC SCALE
40 0 20 40 80
(IN FEET)
1 inch = 40 ft.

REV. / ISSUE	DATE	DESCRIPTION
1	11/12/18	REVISED PER BOARD COMMENTS
2	1/07/19	REVISED PER BOARD COMMENTS

CONSULTANT

ORIENTATION / KEY PLAN

PAULUS, SOKOLOWSKI AND SARTOR, LLC
67A MOUNTAIN BLVD EXT.
P.O. BOX 4039
WARREN, NEW JERSEY 07059
PHONE: (732) 560-9700

CERTIFICATE OF AUTHORIZATION NO. 24GA28032700

ALL DIMENSIONS MUST BE VERIFIED BY THE CONTRACTOR. NOTIFY PAULUS, SOKOLOWSKI AND SARTOR, LLC OF ANY DISCREPANCIES BETWEEN THE CONTRACT DRAWINGS AND THE CONTRACT DRAWINGS OF SPECIFICATIONS BEFORE PROCEEDING WITH CONSTRUCTION.

ALL DIMENSIONS SHALL BE AS NOTED IN WORDS OR NUMBERS ON THE CONTRACT DRAWINGS. DO NOT SCALE THE DRAWINGS TO DETERMINE DIMENSIONS.

THESE CONTRACT DRAWINGS CONTAIN DATA INTENDED SPECIFICALLY FOR THE NOTED PROJECT AND CLIENT. THEY ARE NOT INTENDED FOR USE ON EXTENSIONS OF THIS PROJECT OR FOR REUSE ON ANY OTHER PROJECT.

THE COPYING AND/OR MODIFICATION OF THIS DOCUMENT OR ANY PORTION THEREOF WITHOUT THE WRITTEN PERMISSION OF PAULUS, SOKOLOWSKI AND SARTOR, LLC. IS PROHIBITED.

UNLESS THESE DRAWINGS ARE SPECIFICALLY DESIGNATED AS "CONSTRUCTION ISSUE", THESE DRAWINGS SHALL NOT BE USED FOR CONSTRUCTION OF IMPROVEMENTS DEPICTED HEREIN. CONTRACTORS SHALL NOTIFY THE DESIGN ENGINEER TO OBTAIN CONSTRUCTION DOCUMENTS.

COPYRIGHT 2019 PAULUS, SOKOLOWSKI AND SARTOR, LLC. – ALL RIGHTS RESERVED.

BRIAN D. LADD
LICENSE NO. 37067
PROFESSIONAL ENGINEER

1/7/2019

CLIENT

PROJECT

NEW JERSEY
CENTER OF EXCELLENCE

1041 N.J.S.H. ROUTE 202/206
BLOCK 483, LOTS 17, 18 & 19

TOWNSHIP OF BRIDGEWATER
SOMERSET COUNTY, NEW JERSEY 08807

SHEET TITLE

GRADING PLAN
(SHEET 1 OF 5)

JOB NO.:	00488.0041
DATE:	05/09/2018
DRAWN:	TB/CY
CHECK:	CH/LAD
SCALE:	1" = 40'

SHEET NO. 8 OF 75

C-08

FILENAME: P:\00488\0041\DWG\C\Cad\Plans\C-08 GRADING PLAN.dwg CLIM: LAST EDIT: 1/7/2019 - 03:44:55 PM - USER: thenry

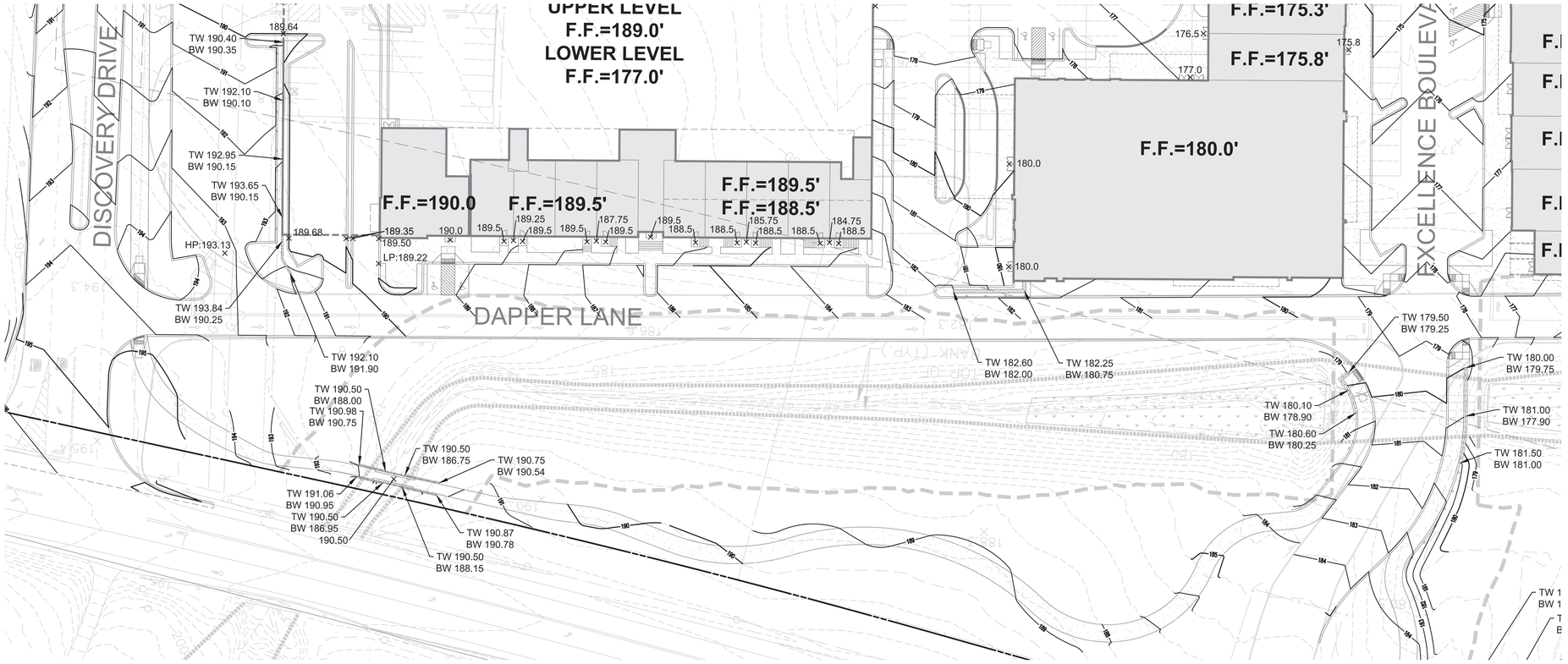

NOTES:

1. SITE PLAN (C-05.01) AND GRADING PLAN (C-08.01) SHOWS ALTERNATE DAPPER LANE/ DISCOVERY DRIVE INTERSECTION TO ALLOW ACCESS FROM DISCOVERY DRIVE TO THE TRAFFIC LIGHT AT STATE HIGHWAY 202/206 AND EXCELLENCE BOULEVARD INTERSECTION, IF THE NEW TRAFFIC LIGHT AT STATE HIGHWAY 202/206 AND DISCOVERY DRIVE INTERSECTION IS NOT CONSTRUCTED AND THE TOWNSHIP COUNCIL GRANTS A WAIVER.
2. SEE SHEET C-08 FOR GRADING INFORMATION OUTSIDE OF ALTERNATE INTERSECTION IMPROVEMENTS.

GRAPHIC SCALE
30 0 15 30 60
(IN FEET)
1 inch = 30 ft.

REV. / ISSUE	DATE	DESCRIPTION

CONSULTANT

ORIENTATION / KEY PLAN

PAULUS, SOKOLOWSKI AND SARTOR, LLC
67A MOUNTAIN BLVD EXT.
P.O. BOX 4039
WARREN, NEW JERSEY 07059
PHONE: (732) 560-9700

CERTIFICATE OF AUTHORIZATION NO. 24GA28032700

ALL DIMENSIONS MUST BE VERIFIED BY THE CONTRACTOR. NOTIFY PAULUS, SOKOLOWSKI AND SARTOR, LLC OF ANY CONFLICTS, ERRORS, AMBIGUITIES OR DISCREPANCIES IN THE CONTRACT DRAWINGS OR SPECIFICATIONS BEFORE PROCEEDING WITH CONSTRUCTION.

ALL DIMENSIONS SHALL BE AS NOTED IN WORDS OR NUMBERS ON THE CONTRACT DRAWINGS. DO NOT SCALE THE DRAWINGS TO DETERMINE DIMENSIONS.

THESE CONTRACT DRAWINGS CONTAIN DATA INTENDED SPECIFICALLY FOR THE NOTED PROJECT AND CLIENT. THEY ARE NOT INTENDED FOR USE ON EXTENSIONS OF THIS PROJECT OR FOR REUSE ON ANY OTHER PROJECT.

THE COPYING AND/OR MODIFICATION OF THIS DOCUMENT OR ANY PORTION THEREOF WITHOUT THE WRITTEN PERMISSION OF PAULUS, SOKOLOWSKI AND SARTOR, LLC IS PROHIBITED.

UNLESS THESE DRAWINGS ARE SPECIFICALLY DESIGNATED AS "CONSTRUCTION ISSUE", THESE DRAWINGS SHALL NOT BE USED FOR CONSTRUCTION OR IMPROVEMENTS DEPICTED HEREIN. CONTRACTORS SHALL NOTIFY THE DESIGN ENGINEER TO OBTAIN CONSTRUCTION DOCUMENTS.

COPYRIGHT 2019 PAULUS, SOKOLOWSKI AND SARTOR, LLC. – ALL RIGHTS RESERVED.

1/7/2019

CLIENT

PROJECT

NEW JERSEY
CENTER OF EXCELLENCE

1041 N.J.S.H. ROUTE 202/206
BLOCK 483, LOTS 17, 18 & 19

TOWNSHIP OF BRIDGEWATER
SOMERSET COUNTY, NEW JERSEY 08807

SHEET TITLE

ALTERNATE INTERSECTION GRADING PLAN (SHEET 2 OF 5)

JOB NO.:	00488.0041
DATE:	01/07/2019
DRAWN:	TB/CY
CHECK:	CH/LAD
SCALE:	1" = 30'

SHEET NO. 8.01 OF 75

C-08.01

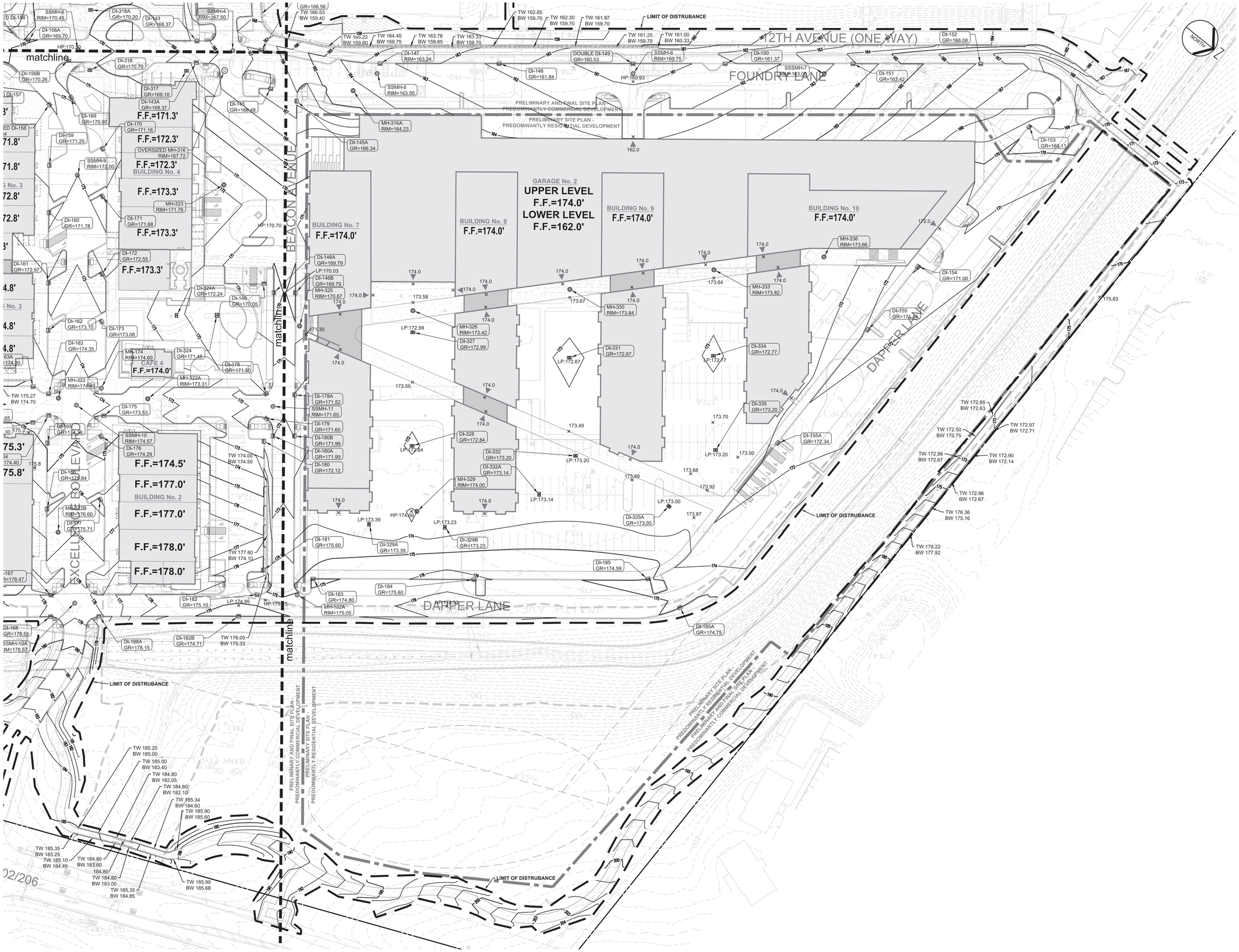

NOTE: STEEP SLOPE AND HILLSIDE AREAS TO BE DISTURBED AS PART OF THIS PROJECT ARE MAN MADE SLOPES LOCATED IN PREVIOUSLY DEVELOPED AREAS MAINTAINED BY THE OWNER.

GRAPHIC SCALE
40 0 20 40 80
(IN FEET)
1 inch = 40 ft.

REV. / ISSUE	DATE	DESCRIPTION
1	11/12/18	REVISED PER BOARD COMMENTS
2	1/07/19	REVISED PER BOARD COMMENTS

CONSULTANT

ORIENTATION / KEY PLAN

PAULUS, SOKOLOWSKI AND SARTOR, LLC

67A MOUNTAIN BLVD EXT.
P.O. BOX 4039
WARREN, NEW JERSEY 07059
PHONE: (732) 560-9700

CERTIFICATE OF AUTHORIZATION NO. 24GA28032700

ALL DIMENSIONS MUST BE VERIFIED BY THE CONTRACTOR. NOTIFY PAULUS, SOKOLOWSKI AND SARTOR, LLC OF CONFLICTS, ERRORS, AMBIGUITIES OR DISCREPANCIES IN THE CONTRACT DRAWINGS OR SPECIFICATIONS BEFORE PROCEEDING WITH CONSTRUCTION.

ALL DIMENSIONS SHALL BE AS NOTED IN BOXES OF NUMBERS ON THE CONTRACT DRAWINGS. DO NOT SCALE DRAWINGS. USE FIGURED DIMENSIONS.

THESE CONSTRUCTION DRAWINGS CONTAIN DATA INTENDED SPECIFICALLY FOR THE NOTED PROJECT AND CLIENT. THEY ARE NOT INTENDED FOR USE ON EXTENSIONS OF THIS PROJECT OR FOR REUSE ON ANY OTHER PROJECT.

THE COPYING AND/OR MODIFICATION OF THIS DOCUMENT OR ANY PORTION THEREOF WITHOUT THE WRITTEN PERMISSION OF PAULUS, SOKOLOWSKI AND SARTOR, LLC IS PROHIBITED.

UNLESS THESE DRAWINGS ARE SPECIFICALLY DESIGNATED AS "CONSTRUCTION ISSUE", THESE DRAWINGS SHALL NOT BE USED FOR CONSTRUCTION OR IMPROVEMENTS DEPICTED THEREON. CONTRACTORS SHALL NOTIFY THE DESIGN ENGINEER TO OBTAIN CONSTRUCTION DOCUMENTS.

COPYRIGHT 2019 PAULUS, SOKOLOWSKI AND SARTOR, LLC. – ALL RIGHTS RESERVED.

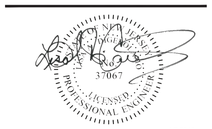

CLIENT

PROJECT

NEW JERSEY
CENTER OF EXCELLENCE

1041 N.J.S.H. ROUTE 202/206
BLOCK 483, LOTS 17, 18 & 19

TOWNSHIP OF BRIDGEWATER
SOMERSET COUNTY, NEW JERSEY 08807

SHEET TITLE

GRADING PLAN
(SHEET 3 OF 5)

JOB NO.:	00488.0041
DATE:	05/09/2018
DRAWN:	TB/CY
CHECK:	CH/LAD
SCALE:	1" = 40'

SHEET NO. 9 OF 75

C-09

README - P:\00488\041\ENGR\CAD\Plans\Grading\C09-3 GRADING PLAN.dwg, LAST EDIT: 1/7/2019 8:42:00 PM, USER: tbrown

REV. / ISSUE	DATE	DESCRIPTION
1	9/17/18	UPDATED FOR SOIL DISRUPTION PLAN
2	11/12/18	REVISED PER BOARD COMMENTS
3	1/07/19	REVISED PER BOARD COMMENTS

PREPARED BY LANGAN
DATED 01/24/11

LIMIT OF DISTRUBANCE

APPROXIMATE SOIL STAGING AREA PER PLAN TITLED "SANOFI-AVENTIS SOIL STAGING AREA" PREPARED BY LANGAN DATED 01/24/11

MATCHLINE SHEET C-10.01
MATCHLINE SHEET C-10

SAND FILTER 147.00

DETENTION BASIN 144.00

BUILDING No. 6
F.F.=172.0

F.F.=170.3
BUILDING No. 5

DISCOVERY DRIVE

EXCELLENCE BOULEVARD

1ST AVENUE

FOUNDRY LANE

matchline

OF-100 TW=153.00
OF-300 TW=150.68
OF-400 TW=143.50
OS-404 GR=151.75
OVERSIZED MH-300A RIM=150.90
OVERSIZED MH-100A RIM=153.50
OVERSIZED DI-101 GR=163.00
OVERSIZED DI-138 GR=163.00
DI-199A GR=164.00
DI-102A GR=164.00
OVERSIZED MH-102 RIM=165.05
OVERSIZED DI-103 GR=165.84
MH-199 RIM=164.80
OVERSIZED DI-104 GR=168.14
DI-104A GR=168.20
OVERSIZED DI-105 GR=171.00
OVERSIZED DI-106 RIM=171.63
DI-106A GR=170.73
OVERSIZED DI-110 GR=172.76
MH-107 RIM=173.75
DI-107A GR=173.54
DI-107B
MH-204 RIM=166.35
DI-138A GR=165.45
MH-203 RIM=167.78
MH-202 RIM=170.95
MH-205 RIM=171.65
OVERSIZED DI-139 GR=166.56
OVERSIZED MH-403 RIM=151.25
OVERSIZED MH-401 RIM=145.42
DI-401A GR=144.11
MH-402 RIM=146.15
OVERSIZED MH-301 RIM=152.05
DOUBLE DI-302 GR=151.75
DI-306 GR=150.05
OVERSIZED MH-312 RIM=151.27
DI-307 GR=149.85
DI-308 GR=149.50
MH-308A RIM=152.10
DI-309 GR=151.29
DOGHOUSE SSMH-1 RIM=151.59
DI-309A GR=151.29
DOUBLE DI-303 GR=152.75
DOUBLE DI-304 GR=153.50
DOUBLE DI-305 GR=153.35
OVERSIZED MH-313 RIM=153.20
MH-201 RIM=167.95
OVERSIZED MH-140 RIM=155.00
DOUBLE DI-141 GR=155.15
DI-206 GR=171.80
OVERSIZED MH-314 RIM=155.40
DI-309B GR=156.38
MH-311A RIM=150.99
DI-141A GR=153.33
DI-309C GR=160.80
DI-207 GR=171.80
MH-315A RIM=160.06
SSMH-8 RIM=170.45
OVERSIZED DI-159 GR=169.50
DI-156A GR=169.70
DI-156B GR=170.26
DI-318A GR=170.20
DI-143 GR=168.37
DI-318 GR=170.70
SSMH-4 RIM=167.50
SSMH-8B RIM=171.60
SSMH-8A
DI-112 GR=171.20
DI-113 GR=171.20
DI-114 GR=171.20
DI-115 GR=171.20
DI-310 GR=150.24
SSMH-2 RIM=150.57
DI-311 GR=150.24
EXISTING SSMH-2A RIM=150.30
OVERSIZED MH-315 RIM=162.00
SSMH-3 RIM=164.38
OVERSIZED DI-142 GR=163.30
DI-311B GR=153.52
DI-144 GR=166.56
DI-147 RIM=163.24

NOTES:
1. STEEP SLOPE AND HILLSIDE AREAS TO BE DISTURBED AS PART OF THIS PROJECT ARE MAN MADE SLOPES LOCATED IN PREVIOUSLY DEVELOPED AREAS MAINTAINED BY THE OWNER.
2. ALL SOIL STOCKPILE MATERIAL WITHIN THE LIMITS OF DISTURBANCE SHALL BE REMOVED AND THE AREA SHALL BE GRADED IN ACCORDANCE WITH THIS GRADING PLAN.

GRAPHIC SCALE
40 0 20 40 80
(IN FEET)
1 inch = 40 ft.

CONSULTANT

ORIENTATION / KEY PLAN

PAULUS, SOKOLOWSKI AND SARTOR, LLC
67A MOUNTAIN BLVD EXT.
P.O. BOX 4039
WARREN, NEW JERSEY 07059
PHONE: (732) 560-9700
CERTIFICATE OF AUTHORIZATION NO. 24GA28032700

ALL DIMENSIONS MUST BE VERIFIED BY THE CONTRACTOR. NOTIFY PAULUS, SOKOLOWSKI AND SARTOR, LLC OF ANY DISCREPANCIES BETWEEN THE FIELD CONDITIONS AND THE CONTRACT DRAWINGS OR SPECIFICATIONS BEFORE PROCEEDING WITH CONSTRUCTION.

ALL DIMENSIONS SHALL BE AS NOTED IN WORDS OR NUMBERS ON THE CONTRACT DRAWINGS. DO NOT SCALE THE DRAWINGS TO DETERMINE DIMENSIONS.

THESE CONTRACT DRAWINGS CONTAIN DATA INTENDED SPECIFICALLY FOR THE NOTED PROJECT AND CLIENT. THEY ARE NOT INTENDED FOR USE ON EXTENSIONS OF THIS PROJECT OR FOR REUSE ON ANY OTHER PROJECT.

THE COPYING AND/OR MODIFICATION OF THIS DOCUMENT OR ANY PORTION THEREOF WITHOUT THE WRITTEN PERMISSION OF PAULUS, SOKOLOWSKI AND SARTOR, LLC. IS PROHIBITED.

UNLESS THESE DRAWINGS ARE SPECIFICALLY DESIGNATED AS "CONSTRUCTION ISSUE", THESE DRAWINGS SHALL NOT BE USED FOR CONSTRUCTION OR IMPROVEMENTS DEPICTED HEREIN. CONTRACTORS SHALL NOTIFY THE DESIGN ENGINEER TO OBTAIN CONSTRUCTION DOCUMENTS.

COPYRIGHT 2019 PAULUS, SOKOLOWSKI AND SARTOR, LLC. – ALL RIGHTS RESERVED.

BRIAN K. SOKOLOWSKI
37067
LICENSED PROFESSIONAL ENGINEER
1/7/2019

CLIENT

PROJECT
NEW JERSEY
CENTER OF EXCELLENCE
1041 N.J.S.H. ROUTE 202/206
BLOCK 483, LOTS 17, 18 & 19
TOWNSHIP OF BRIDGEWATER
SOMERSET COUNTY, NEW JERSEY 08807

SHEET TITLE
GRADING PLAN
(SHEET 4 OF 5)

JOB NO.:	00488.0041
DATE:	05/09/2018
DRAWN:	TB/CY
CHECK:	CH/LAD
SCALE:	1" = 40'
SHEET NO.	10 OF 75

C-10

FILENAME: P:\00488\0041\DWG\CAD\Plans\Grad\C-10 GRADING PLAN.dwg 1:1 LAST EDIT: 1/8/2019 11:48:51 PM USER: tbenge

REV. / ISSUE	DATE	DESCRIPTION
1	9/17/18	UPDATED FOR SOIL DISRUPTION PLAN
2	11/12/18	REVISED PER BOARD COMMENTS
3	1/07/19	REVISED PER BOARD COMMENTS

NORTH

INTERSTATE ROUTE 287

50' WETLAND BUFFER

LIMIT OF DISTRUBANCE

APPROXIMATE SOIL STAGING AREA PER PLAN TITLED "SANOFI-AVENTIS SOIL STAGING AREA" PREPARED BY LANGAN DATED 01/24/11

SAND FILTER 147.00

DETENTION BASIN 144.00

OF-300 TW=150.68

OVERSIZED MH-300A RIM=150.90

OF-100 TW=153.00

OVERSIZED MH-100A RIM=153.50

OVERSIZED DI-101

OS-404 GR=151.75

OVERSIZED MH-403 RIM=151.25

OF-400 TW=143.50

DI-401A GR=144.11

OVERSIZED MH-401 RIM=145.42

MH-402 RIM=146.15

OVERSIZED MH-301 RIM=152.05

DOUBLE DI-302 GR=151.75

DI-306 GR=150.05

OVERSIZED MH-312 RIM=151.27

DI-307 GR=149.85

DI-308 GR=149.50

MH-308A RIM=152.10

DI-309 GR=151.29

DOGHOUSE SSMH-1 RIM=151.59

DOUBLE DI-303

DISCOVERY DRIVE

MATCHLINE SHEET C-10.01
MATCHLINE SHEET C-10

NOTES:

1. STEEP SLOPE AND HILLSIDE AREAS TO BE DISTURBED AS PART OF THIS PROJECT ARE MAN MADE SLOPES LOCATED IN PREVIOUSLY DEVELOPED AREAS MAINTAINED BY THE OWNER.
2. ALL SOIL STOCKPILE MATERIAL WITHIN THE LIMITS OF DISTURBANCE SHALL BE REMOVED AND THE AREA SHALL BE GRADED IN ACCORDANCE WITH THIS GRADING PLAN.

GRAPHIC SCALE
40 0 20 40 80
(IN FEET)
1 inch = 40 ft.

CONSULTANT

ORIENTATION / KEY PLAN

PAULUS, SOKOLOWSKI AND SARTOR, LLC

67A MOUNTAIN BLVD EXT.
P.O. BOX 4039
WARREN, NEW JERSEY 07059
PHONE: (732) 560-9700

CERTIFICATE OF AUTHORIZATION NO. 24GA28032700

ALL DIMENSIONS MUST BE VERIFIED BY THE CONTRACTOR. NOTIFY PAULUS, SOKOLOWSKI AND SARTOR, LLC OF ANY CONFLICTS, ERRORS, AMBIGUITIES OR DISCREPANCIES IN THE CONTRACT DRAWINGS OR SPECIFICATIONS BEFORE PROCEEDING WITH CONSTRUCTION.

ALL DIMENSIONS SHALL BE AS NOTED IN WORDS OR NUMBERS ON THE CONTRACT DRAWINGS. DO NOT SCALE THE DRAWINGS TO DETERMINE DIMENSIONS.

THESE CONTRACT DRAWINGS CONTAIN DATA INTENDED SPECIFICALLY FOR THE NOTED PROJECT ONLY. THEY ARE NOT SUITABLE OR INTENDED FOR USE ON EXTENSIONS OF THIS PROJECT OR FOR REUSE ON ANY OTHER PROJECT.

THE COPYING AND/OR MODIFICATION OF THIS DOCUMENT OR ANY PORTION THEREOF WITHOUT THE WRITTEN PERMISSION OF PAULUS, SOKOLOWSKI AND SARTOR, LLC. IS PROHIBITED.

UNLESS THESE DRAWINGS ARE SPECIFICALLY DESIGNATED AS "CONSTRUCTION ISSUE", THEY ARE NOT INTENDED FOR CONSTRUCTION PURPOSES. PRIOR TO CONSTRUCTION HEREIN, CONTRACTORS SHALL NOTIFY THE DESIGN ENGINEER TO OBTAIN CONSTRUCTION DOCUMENTS.

COPYRIGHT 2019 PAULUS, SOKOLOWSKI AND SARTOR, LLC – ALL RIGHTS RESERVED.



1/7/2019

CLIENT

PROJECT

NEW JERSEY
CENTER OF EXCELLENCE

1041 N.J.S.H. ROUTE 202/206
BLOCK 483, LOTS 17, 18 & 19

TOWNSHIP OF BRIDGEWATER
SOMERSET COUNTY, NEW JERSEY 08807

SHEET TITLE

GRADING PLAN
(SHEET 5 OF 5)

JOB NO.:	00488.0041
DATE:	05/09/2018
DRAWN:	TB/CY
CHECK:	CH/LAD
SCALE:	1" = 40'

SHEET NO. 10.01 OF 75

C-10.01

DWG NAME: P:\488\0041\ENGR\CAD\Plans\grad\C-10.01_GRADING PLAN (SHEET 5 OF 5).dwg | USER: TBOY | 1/8/2019 - 10:46:47 PM | XREFs: Viewing All

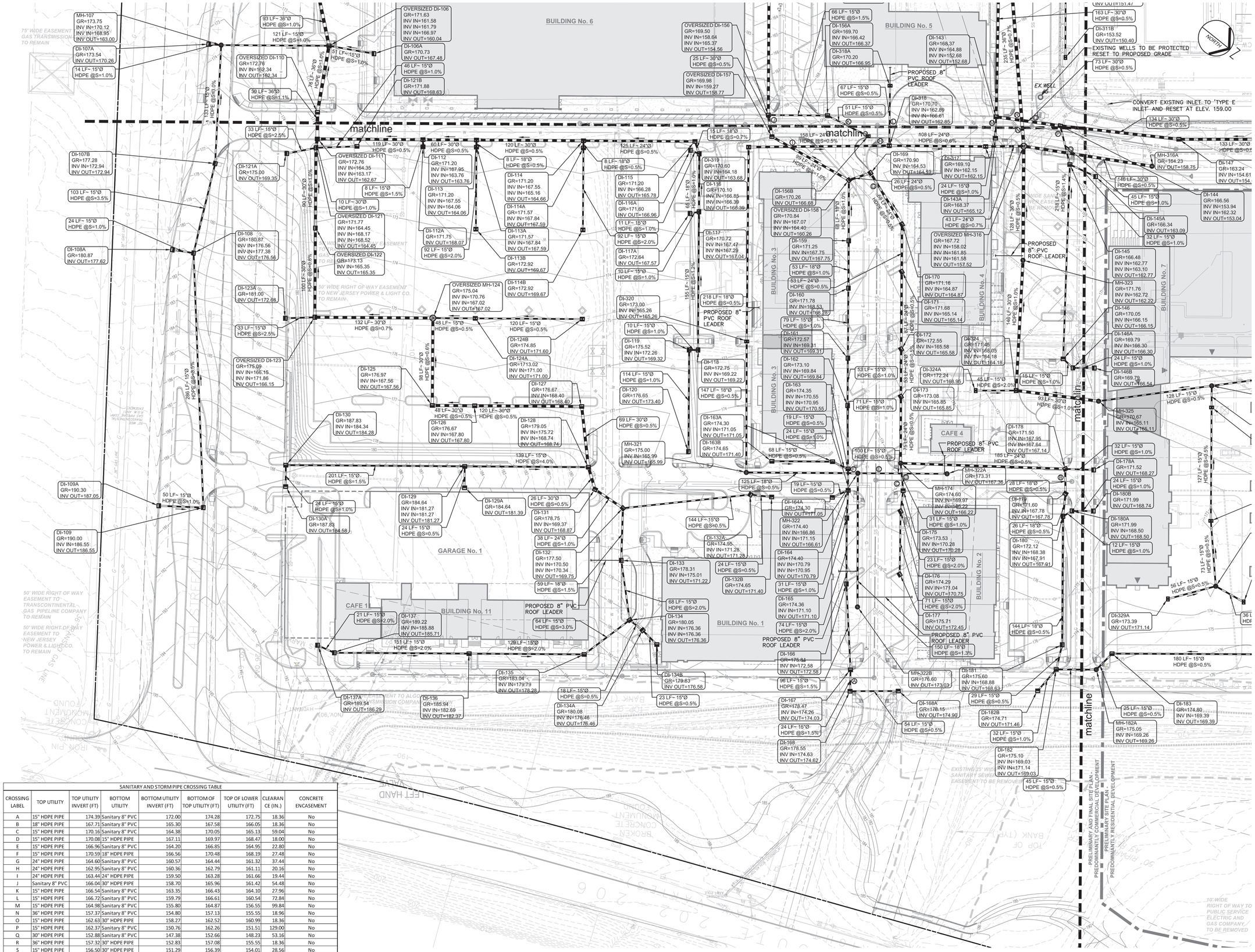

SANITARY AND STORM PIPE CROSSING TABLE							
CROSSING LABEL	TOP UTILITY	TOP UTILITY INVERT (FT)	BOTTOM UTILITY	BOTTOM UTILITY INVERT (FT)	BOTTOM OF TOP UTILITY (FT)	TOP OF LOWER UTILITY (FT)	CLEARANCE (IN.)	CONCRETE ENCASEMENT
A	15" HDPE PIPE	174.39	Sanitary 8" PVC	172.00	174.28	172.75	18.36	No
B	18" HDPE PIPE	167.71	Sanitary 8" PVC	165.30	167.58	166.05	18.36	No
C	15" HDPE PIPE	170.16	Sanitary 8" PVC	164.38	170.05	165.13	59.04	No
D	15" HDPE PIPE	170.08	15" HDPE PIPE	167.11	169.97	168.47	18.00	No
E	15" HDPE PIPE	166.96	Sanitary 8" PVC	164.20	166.85	164.95	22.80	No
F	15" HDPE PIPE	170.59	18" HDPE PIPE	166.56	170.48	168.19	27.48	No
G	24" HDPE PIPE	164.60	Sanitary 8" PVC	160.57	164.44	161.32	37.44	No
H	24" HDPE PIPE	162.95	Sanitary 8" PVC	160.36	162.79	161.11	20.16	No
I	24" HDPE PIPE	163.44	24" HDPE PIPE	159.50	163.28	161.66	19.44	No
J	Sanitary 8" PVC	166.04	30" HDPE PIPE	158.70	165.96	161.42	54.48	No
K	15" HDPE PIPE	166.54	Sanitary 8" PVC	163.35	166.43	164.10	27.96	No
L	15" HDPE PIPE	166.72	Sanitary 8" PVC	159.79	166.61	160.54	72.84	No
M	15" HDPE PIPE	164.98	Sanitary 8" PVC	155.80	164.87	156.55	99.84	No
N	36" HDPE PIPE	157.37	Sanitary 8" PVC	154.80	157.13	155.55	18.96	No
O	15" HDPE PIPE	162.63	30" HDPE PIPE	158.27	162.52	160.99	18.36	No
P	15" HDPE PIPE	162.37	Sanitary 8" PVC	150.76	162.26	151.51	129.00	No
Q	30" HDPE PIPE	152.88	Sanitary 8" PVC	147.38	152.66	148.23	53.16	No
R	36" HDPE PIPE	157.32	30" HDPE PIPE	152.83	157.08	155.55	18.36	No
S	15" HDPE PIPE	156.50	30" HDPE PIPE	151.29	156.39	154.01	28.56	No
T	18" HDPE PIPE	159.64	48" HDPE PIPE	148.15	159.51	152.40	85.32	No
U	15" HDPE PIPE	147.97	Sanitary 8" PVC	133.68	147.86	134.60	159.12	No
V	15" HDPE PIPE	146.95	Sanitary 8" PVC	134.64	146.84	135.56	135.36	No
W	18" HDPE PIPE	145.28	18" HDPE PIPE	142.36	145.15	143.99	13.92	Yes

REV. / ISSUE	DATE	DESCRIPTION
1	11/12/18	REVISED PER BOARD COMMENTS
2	1/07/19	REVISED PER BOARD COMMENTS

CONSULTANT

ORIENTATION / KEY PLAN

PAULUS, SOKOLOWSKI AND SARTOR, LLC
67A MOUNTAIN BLVD EXT.
P.O. BOX 4039
WARREN, NEW JERSEY 07059
PHONE: (732) 560-9700

CERTIFICATE OF AUTHORIZATION NO. 24GA28032700

ALL DIMENSIONS MUST BE VERIFIED BY THE CONTRACTOR. NOTIFY PAULUS, SOKOLOWSKI AND SARTOR, LLC. OF ANY CONFLICTS, ERRORS, AMBIGUITIES OR DISCREPANCIES IN THE CONTRACT DRAWINGS OR SPECIFICATIONS BEFORE PROCEEDING WITH CONSTRUCTION.

ALL DIMENSIONS SHALL BE AS NOTED IN WORDS OR NUMBERS ON THE CONTRACT DRAWINGS. DO NOT SCALE THE DRAWINGS TO OBTAIN DIMENSIONS.

THESE CONTRACT DRAWINGS CONTAIN DATA INTENDED SPECIFICALLY FOR THE NOTED PROJECT ONLY. THEY ARE NOT SUITABLE FOR REUSE FOR USE ON EXTENSIONS OF THIS PROJECT OR FOR REUSE ON ANY OTHER PROJECT.

THE COPYING AND/OR MODIFICATION OF THIS DOCUMENT OR ANY PORTION THEREOF WITHOUT THE WRITTEN PERMISSION OF PAULUS, SOKOLOWSKI AND SARTOR, LLC. IS PROHIBITED.

UNLESS THESE DRAWINGS ARE SPECIFICALLY DESIGNATED AS "CONSTRUCTION ISSUE", THESE DRAWINGS SHALL NOT BE USED FOR CONSTRUCTION OR IMPROVEMENTS DEPICTED HEREIN. CONTRACTORS SHALL NOTIFY THE DESIGN ENGINEER TO OBTAIN CONSTRUCTION DOCUMENTS.

COPYRIGHT 2018 PAULUS, SOKOLOWSKI AND SARTOR, LLC – ALL RIGHTS RESERVED.



1/7/2019

CLIENT

PROJECT

NEW JERSEY CENTER OF EXCELLENCE

1041 N.J.S.H. ROUTE 202/206
BLOCK 483, LOTS 17, 18 & 19

TOWNSHIP OF BRIDGEWATER
SOMERSET COUNTY, NEW JERSEY 08807

SHEET TITLE

DRAINAGE PLAN (SHEET 1 OF 4)

JOB NO.:	00488.0041
DATE:	05/09/2018
DRAWN:	TB/CY
CHECK:	CH/LAD
SCALE:	1" = 40'

SHEET NO. 11 OF 75

C-11

FILE NAME: P:\00488\041\05\dwg\Cad\Plans\pg\C11-1 DRAINAGE UTILITY PLAN.dwg LC11 LAST EDIT: 01/07/2019 - 02:33:59 PM LOGIN: tbenning

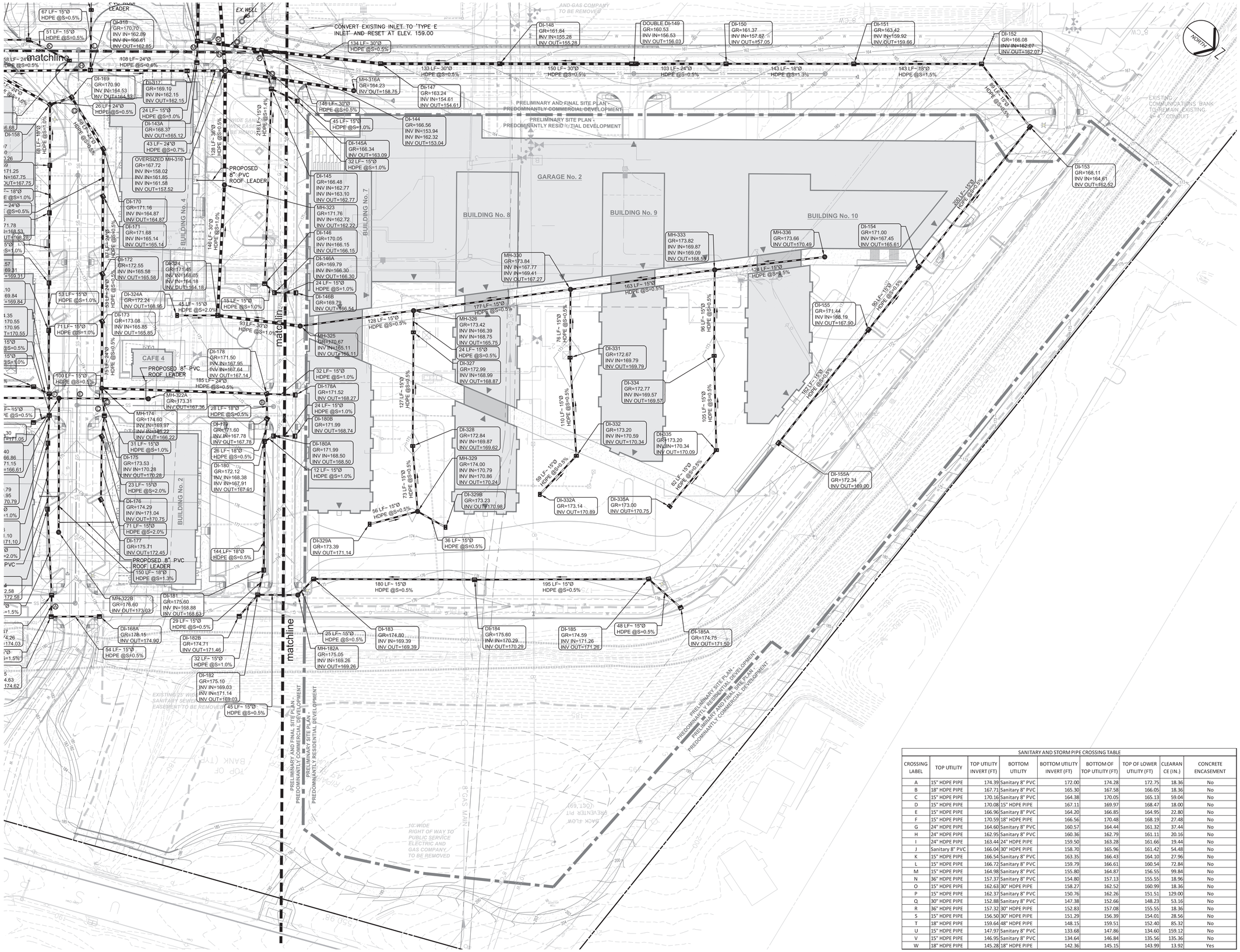

SANITARY AND STORM PIPE CROSSING TABLE								
CROSSING LABEL	TOP UTILITY	TOP UTILITY INVERT (FT)	BOTTOM UTILITY	BOTTOM UTILITY INVERT (FT)	BOTTOM OF TOP UTILITY (FT)	TOP OF LOWER UTILITY (FT)	CLEARANCE (IN.)	CONCRETE ENCASEMENT
A	15" HDPE PIPE	174.39	Sanitary 8" PVC	172.00	174.28	172.75	18.36	No
B	18" HDPE PIPE	167.71	Sanitary 8" PVC	165.30	167.58	166.05	18.36	No
C	15" HDPE PIPE	170.16	Sanitary 8" PVC	164.38	170.05	165.13	59.04	No
D	15" HDPE PIPE	170.08	15" HDPE PIPE	167.11	169.97	168.47	18.00	No
E	15" HDPE PIPE	166.96	Sanitary 8" PVC	164.20	166.85	164.95	22.80	No
F	15" HDPE PIPE	170.59	18" HDPE PIPE	166.56	170.48	168.19	27.48	No
G	24" HDPE PIPE	164.60	Sanitary 8" PVC	160.57	164.44	161.32	37.44	No
H	24" HDPE PIPE	162.95	Sanitary 8" PVC	160.36	162.79	161.11	20.16	No
I	24" HDPE PIPE	163.44	24" HDPE PIPE	159.50	163.28	161.66	19.44	No
J	Sanitary 8" PVC	166.04	30" HDPE PIPE	158.70	165.96	161.42	54.48	No
K	15" HDPE PIPE	166.54	Sanitary 8" PVC	163.35	166.43	164.10	27.96	No
L	15" HDPE PIPE	166.72	Sanitary 8" PVC	159.79	166.61	160.54	72.84	No
M	15" HDPE PIPE	164.98	Sanitary 8" PVC	155.80	164.87	156.55	99.84	No
N	36" HDPE PIPE	157.37	Sanitary 8" PVC	154.80	157.13	155.55	18.96	No
O	15" HDPE PIPE	162.63	30" HDPE PIPE	158.27	162.52	160.99	18.36	No
P	15" HDPE PIPE	162.37	Sanitary 8" PVC	150.76	162.26	151.51	129.00	No
Q	30" HDPE PIPE	152.88	Sanitary 8" PVC	147.38	152.66	148.23	53.16	No
R	36" HDPE PIPE	157.32	30" HDPE PIPE	152.83	157.08	155.55	18.36	No
S	15" HDPE PIPE	156.50	30" HDPE PIPE	151.29	156.39	154.01	28.56	No
T	18" HDPE PIPE	159.64	48" HDPE PIPE	148.15	159.51	152.40	85.32	No
U	15" HDPE PIPE	147.97	Sanitary 8" PVC	133.68	147.86	134.60	159.12	No
V	15" HDPE PIPE	146.95	Sanitary 8" PVC	134.64	146.84	135.56	135.36	No
W	18" HDPE PIPE	145.28	18" HDPE PIPE	142.36	145.15	143.99	13.92	Yes

NOTE: REFER TO LANDSCAPE ARCHITECT PLAN FOR COURTYARD DETAIL.

GRAPHIC SCALE
40 0 20 40 80
(IN FEET)
1 inch = 40 ft.

REV. / ISSUE	DATE	DESCRIPTION
1	11/12/18	REVISED PER BOARD COMMENTS
2	1/07/19	REVISED PER BOARD COMMENTS

CONSULTANT

ORIENTATION / KEY PLAN

PAULUS, SOKOLOWSKI AND SARTOR, LLC

67A MOUNTAIN BLVD EXT.
P.O. BOX 4039
WARREN, NEW JERSEY 07059
PHONE: (732) 560-9700

CERTIFICATE OF AUTHORIZATION NO. 24GA28032700

ALL DIMENSIONS MUST BE VERIFIED BY THE CONTRACTOR. NOTIFY PAULUS, SOKOLOWSKI AND SARTOR, LLC OF ANY CONFLICTS, ERRORS, AMBIGUITIES OR DISCREPANCIES IN THE CONTRACT DRAWINGS OR SPECIFICATIONS BEFORE PROCEEDING WITH CONSTRUCTION.

ALL DIMENSIONS SHALL BE AS NOTED IN WORDS OR NUMBERS ON THE CONTRACT DRAWINGS. DO NOT SCALE THE DRAWINGS TO DETERMINE DIMENSIONS.

THESE CONTRACT DRAWINGS CONTAIN DATA INTENDED SPECIFICALLY FOR THE NOTED PROJECT AND CLIENT. THEY ARE NOT INTENDED FOR USE ON EXTENSIONS OF THIS PROJECT OR FOR REUSE ON ANY OTHER PROJECT.

THE COPYING AND/OR MODIFICATION OF THIS DOCUMENT OR ANY PORTION THEREOF WITHOUT THE WRITTEN PERMISSION OF PAULUS, SOKOLOWSKI AND SARTOR, LLC. IS PROHIBITED.

UNLESS THESE DRAWINGS ARE SPECIFICALLY DESIGNATED AS "CONSTRUCTION ISSUE", THESE DRAWINGS SHALL NOT BE USED FOR CONSTRUCTION OR IMPROVEMENTS DEPICTED THEREIN. CONTRACTORS SHALL NOTIFY THE DESIGN ENGINEER TO OBTAIN CONSTRUCTION DOCUMENTS.

COPYRIGHT 2019 PAULUS, SOKOLOWSKI AND SARTOR, LLC – ALL RIGHTS RESERVED.



1/7/2019

CLIENT

PROJECT

NEW JERSEY
CENTER OF EXCELLENCE

1041 N.J.S.H. ROUTE 202/206
BLOCK 483, LOTS 17, 18 & 19

TOWNSHIP OF BRIDGEWATER
SOMERSET COUNTY, NEW JERSEY 08807

SHEET TITLE

DRAINAGE PLAN
(SHEET 2 OF 4)

JOB NO.:	00488.0041
DATE:	05/09/2018
DRAWN:	TB/CY
CHECK:	CH/LAD
SCALE:	1" = 40'

SHEET NO. 12 OF 75

C-12

FILE NAME: P:\00488\004\DWGS-CivilPlotting\C1-15 DRAINAGE_UTILITY PLAN.dwg C1-9 LAST EDIT: 01/7/2019, 02:24:51 PM LOGIN: tbenning

SANITARY AND STORM PIPE CROSSING TABLE								
CROSSING LABEL	TOP UTILITY	TOP UTILITY INVERT (FT)	BOTTOM UTILITY	BOTTOM UTILITY INVERT (FT)	BOTTOM OF TOP UTILITY (FT)	TOP OF LOWER UTILITY (FT)	CLEARANCE (IN.)	CONCRETE ENCASEMENT
A	15" HDPE PIPE	174.39	Sanitary 8" PVC	172.00	174.28	172.75	18.36	No
B	18" HDPE PIPE	167.71	Sanitary 8" PVC	165.30	167.58	166.05	18.36	No
C	15" HDPE PIPE	170.16	Sanitary 8" PVC	164.38	170.05	165.13	59.04	No
D	15" HDPE PIPE	170.08	15" HDPE PIPE	167.11	169.97	168.47	18.00	No
E	15" HDPE PIPE	166.96	Sanitary 8" PVC	164.20	166.85	164.95	22.80	No
F	15" HDPE PIPE	170.59	18" HDPE PIPE	166.56	170.48	168.19	27.48	No
G	24" HDPE PIPE	164.60	Sanitary 8" PVC	160.57	164.44	161.32	37.44	No
H	24" HDPE PIPE	162.95	Sanitary 8" PVC	160.36	162.79	161.11	20.16	No
I	24" HDPE PIPE	163.44	24" HDPE PIPE	159.50	163.28	161.66	19.44	No
J	Sanitary 8" PVC	166.04	30" HDPE PIPE	158.70	165.96	161.42	54.48	No
K	15" HDPE PIPE	166.54	Sanitary 8" PVC	163.35	166.43	164.10	27.96	No
L	15" HDPE PIPE	166.72	Sanitary 8" PVC	159.79	166.61	160.54	72.84	No
M	15" HDPE PIPE	164.98	Sanitary 8" PVC	155.80	164.87	156.55	99.84	No
N	36" HDPE PIPE	157.37	Sanitary 8" PVC	154.80	157.13	155.55	18.96	No
O	15" HDPE PIPE	162.63	30" HDPE PIPE	158.27	162.52	160.99	18.36	No
P	15" HDPE PIPE	162.37	Sanitary 8" PVC	150.76	162.26	151.51	129.00	No
Q	30" HDPE PIPE	152.88	Sanitary 8" PVC	147.38	152.66	148.23	53.16	No
R	36" HDPE PIPE	157.32	30" HDPE PIPE	152.83	157.08	155.55	18.36	No
S	15" HDPE PIPE	156.50	30" HDPE PIPE	151.29	156.39	154.01	28.56	No
T	18" HDPE PIPE	159.64	48" HDPE PIPE	148.15	159.51	152.40	85.32	No
U	15" HDPE PIPE	147.97	Sanitary 8" PVC	133.68	147.86	134.60	159.12	No
V	15" HDPE PIPE	146.95	Sanitary 8" PVC	134.64	146.84	135.56	135.36	No
W	18" HDPE PIPE	145.28	18" HDPE PIPE	142.36	145.15	143.99	13.92	Yes

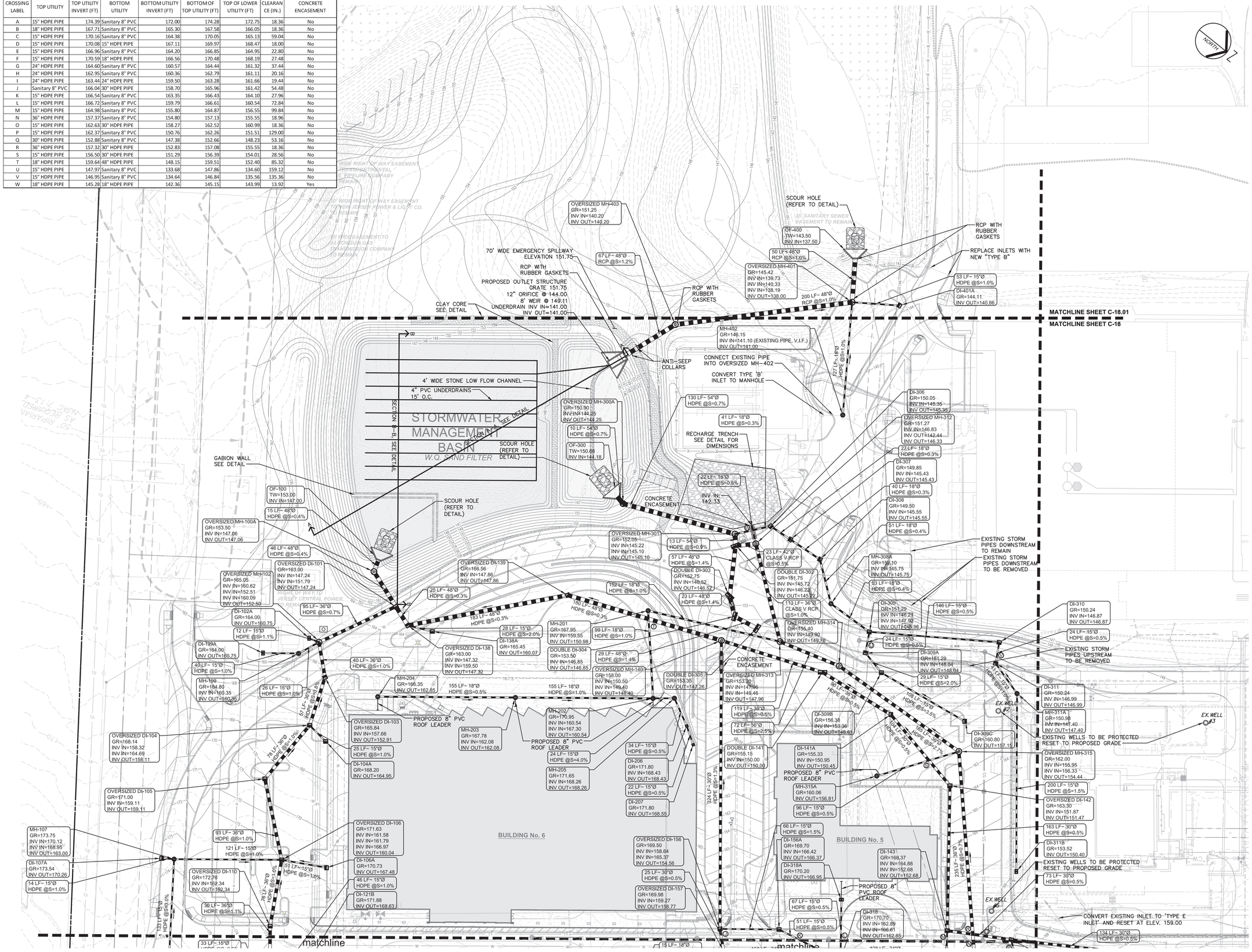

GRAPHIC SCALE
40 0 20 40 80
(IN FEET)
1 inch = 40 ft.

REV. / ISSUE	DATE	DESCRIPTION
1	11/12/18	REVISED PER BOARD COMMENTS
2	1/07/19	REVISED PER BOARD COMMENTS

CONSULTANT

ORIENTATION / KEY PLAN

PAULUS, SOKOLOWSKI AND SARTOR, LLC

67A MOUNTAIN BLVD EXT.
P.O. BOX 4039
WARREN, NEW JERSEY 07059
PHONE: (732) 560-9700

CERTIFICATE OF AUTHORIZATION NO. 24GA28032700

ALL DIMENSIONS MUST BE VERIFIED BY THE CONTRACTOR. NOTIFY PAULUS, SOKOLOWSKI AND SARTOR, LLC. OF ANY CONFLICTS, ERRORS, AMBIGUITIES OR DISCREPANCIES IN THE CONTRACT DRAWINGS OR SPECIFICATIONS BEFORE PROCEEDING WITH CONSTRUCTION.

ALL DIMENSIONS SHALL BE AS NOTED IN WORDS OR NUMBERS ON THE CONTRACT DRAWINGS. DO NOT SCALE THE DRAWINGS TO DETERMINE DIMENSIONS.

THESE CONTRACT DRAWINGS CONTAIN DATA INTENDED SPECIFICALLY FOR THE NOTED PROJECT AND CLIENT. THEY ARE NOT INTENDED FOR USE ON EXTENSIONS OF THIS PROJECT OR FOR REUSE ON ANY OTHER PROJECT.

THE COPYING AND/OR MODIFICATION OF THIS DOCUMENT OR ANY PORTION THEREOF WITHOUT THE WRITTEN PERMISSION OF PAULUS, SOKOLOWSKI AND SARTOR, LLC. IS PROHIBITED.

UNLESS THESE DRAWINGS ARE SPECIFICALLY DESIGNATED AS "CONSTRUCTION ISSUE", THEY SHALL NOT BE USED FOR BIDDING OR CONSTRUCTION PURPOSES. PRIOR TO BIDDING, INTERVAL CONTRACTORS SHALL NOTIFY THE DESIGN ENGINEER TO OBTAIN CONSTRUCTION DOCUMENTS.

COPYRIGHT 2019 PAULUS, SOKOLOWSKI AND SARTOR, LLC. – ALL RIGHTS RESERVED.

LICENSED PROFESSIONAL ENGINEER
37067
1/7/2019

CLIENT

PROJECT

NEW JERSEY
CENTER OF EXCELLENCE

1041 N.J.S.H. ROUTE 202/206
BLOCK 483, LOTS 17, 18 & 19

TOWNSHIP OF BRIDGEWATER
SOMERSET COUNTY, NEW JERSEY 08807

SHEET TITLE

DRAINAGE PLAN
(SHEET 3 OF 4)

JOB NO.:	00488.0041
DATE:	05/09/2018
DRAWN:	TB/CY
CHECK:	CH/LAD
SCALE:	1" = 40'

SHEET NO. 13 OF 75

C-13

FILENAME: P:\00488\001\Dwg\Cad\Plans\dwg\C13-14 STORAGE_UTILITY PLAN.dwg 5:23 | LAST EDIT: 01/07/2019 10:24:24 PM | CADIA Services

SANITARY AND STORM PIPE CROSSING TABLE

CROSSING LABEL	TOP UTILITY	TOP UTILITY INVERT (FT)	BOTTOM UTILITY	BOTTOM UTILITY INVERT (FT)	BOTTOM OF TOP UTILITY (FT)	TOP OF LOWER UTILITY (FT)	CLEARANCE (IN.)	CONCRETE ENCASEMENT
A	15" HDPE PIPE	174.39	Sanitary 8" PVC	172.00	174.28	172.75	18.36	No
B	18" HDPE PIPE	167.71	Sanitary 8" PVC	165.30	167.58	166.05	18.36	No
C	15" HDPE PIPE	170.16	Sanitary 8" PVC	164.38	170.05	165.13	59.04	No
D	15" HDPE PIPE	170.08	15" HDPE PIPE	167.11	169.97	168.47	18.00	No
E	15" HDPE PIPE	166.96	Sanitary 8" PVC	164.20	166.85	164.95	22.80	No
F	15" HDPE PIPE	170.59	18" HDPE PIPE	166.56	170.48	168.19	27.48	No
G	24" HDPE PIPE	164.60	Sanitary 8" PVC	160.57	164.44	161.32	37.44	No
H	24" HDPE PIPE	162.95	Sanitary 8" PVC	160.36	162.79	161.11	20.16	No
I	24" HDPE PIPE	163.44	24" HDPE PIPE	159.50	163.28	161.66	19.44	No
J	Sanitary 8" PVC	166.04	30" HDPE PIPE	158.70	165.96	161.42	54.48	No
K	15" HDPE PIPE	166.54	Sanitary 8" PVC	163.35	166.43	164.10	27.96	No
L	15" HDPE PIPE	166.72	Sanitary 8" PVC	159.79	166.61	160.54	72.84	No
M	15" HDPE PIPE	164.98	Sanitary 8" PVC	155.80	164.87	156.55	99.84	No
N	36" HDPE PIPE	157.37	Sanitary 8" PVC	154.80	157.13	155.55	18.96	No
O	15" HDPE PIPE	162.63	30" HDPE PIPE	158.27	162.52	160.99	18.36	No
P	15" HDPE PIPE	162.37	Sanitary 8" PVC	150.76	162.26	151.51	129.00	No
Q	30" HDPE PIPE	152.88	Sanitary 8" PVC	147.38	152.66	148.23	53.16	No
R	36" HDPE PIPE	157.32	30" HDPE PIPE	152.83	157.08	155.55	18.36	No
S	15" HDPE PIPE	156.50	30" HDPE PIPE	151.29	156.39	154.01	28.56	No
T	18" HDPE PIPE	159.64	48" HDPE PIPE	148.15	159.51	152.40	85.32	No
U	15" HDPE PIPE	147.97	Sanitary 8" PVC	133.68	147.86	134.60	159.12	No
V	15" HDPE PIPE	146.95	Sanitary 8" PVC	134.64	146.84	135.56	135.36	No
W	18" HDPE PIPE	145.28	18" HDPE PIPE	142.36	145.15	143.99	13.92	Yes

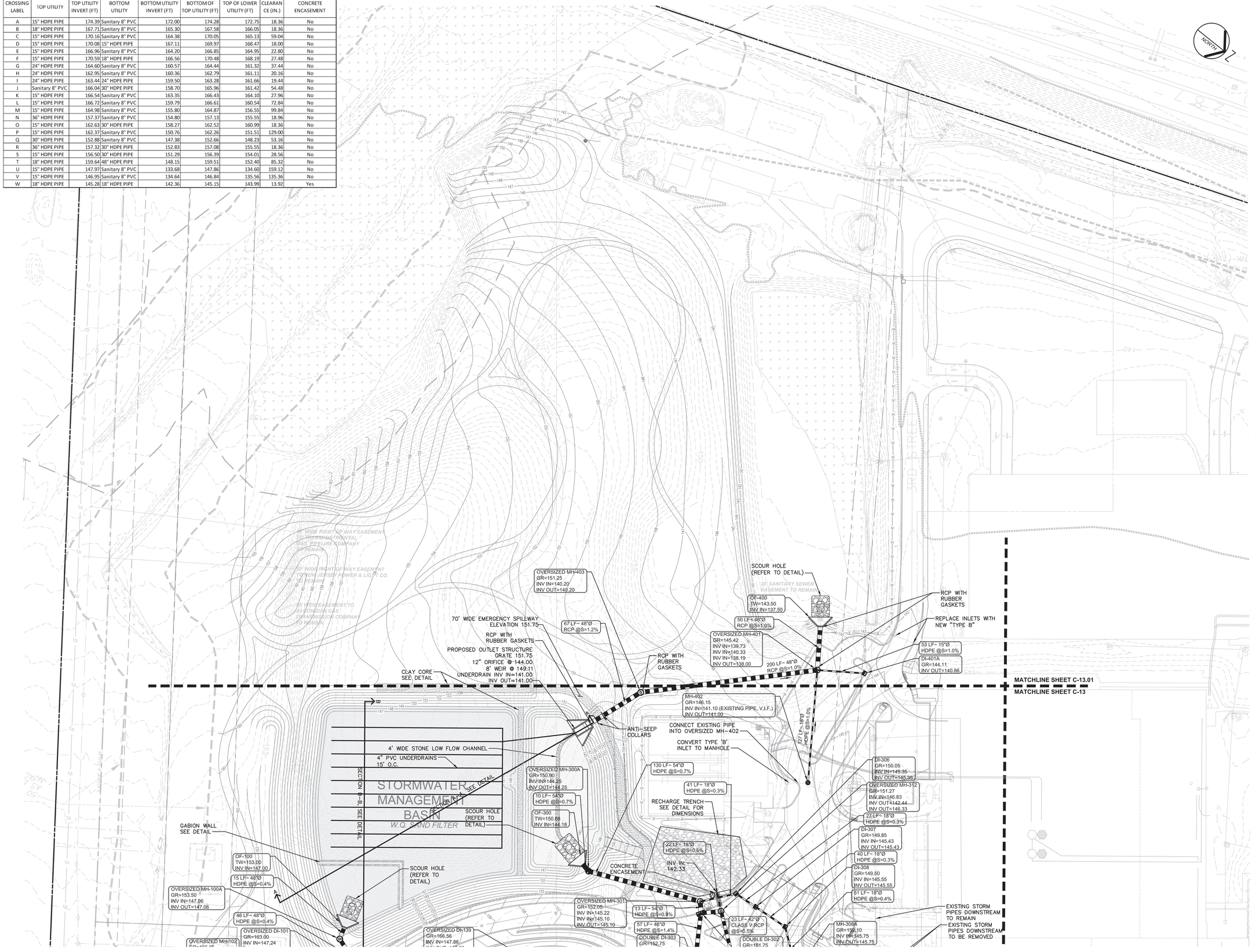

GRAPHIC SCALE
40 0 20 40 80
(IN FEET)
1 inch = 40 ft.

REV. / ISSUE	DATE	DESCRIPTION

CONSULTANT

ORIENTATION / KEY PLAN

PAULUS, SOKOLOWSKI AND SARTOR, LLC
67A MOUNTAIN BLVD EXT.
P.O. BOX 4039
WARREN, NEW JERSEY 07059
PHONE: (732) 560-9700

CERTIFICATE OF AUTHORIZATION NO. 24GA28032700

ALL DIMENSIONS MUST BE VERIFIED BY THE CONTRACTOR, NOTIFY PAULUS, SOKOLOWSKI AND SARTOR, LLC OF ANY DISCREPANCIES OR OMISSIONS BETWEEN THE CONTRACT DRAWINGS OR SPECIFICATIONS BEFORE PROCEEDING WITH CONSTRUCTION.

ALL DIMENSIONS SHALL BE AS NOTED IN WORDS OR NUMBERS ON THE CONTRACT DRAWINGS. DO NOT SCALE THE DRAWINGS TO DETERMINE DIMENSIONS.

THESE CONTRACT DRAWINGS CONTAIN DATA INTENDED SPECIFICALLY FOR THE NOTED PROJECT AND CLIENT, THEY ARE NOT INTENDED FOR USE ON EXTENSIONS OF THIS PROJECT OR FOR REUSE ON ANY OTHER PROJECT.

THE COPYING AND/OR MODIFICATION OF THIS DOCUMENT OR ANY PORTION THEREOF WITHOUT THE WRITTEN PERMISSION OF PAULUS, SOKOLOWSKI AND SARTOR, LLC IS PROHIBITED.

UNLESS THESE DRAWINGS ARE SPECIFICALLY DESIGNATED AS "CONSTRUCTION ISSUE", THESE DRAWINGS SHALL NOT BE USED FOR CONSTRUCTION OR IMPROVEMENTS DEPICTED HEREON. CONTRACTORS SHALL NOTIFY THE DESIGN ENGINEER TO OBTAIN CONSTRUCTION DOCUMENTS.

COPYRIGHT 2019 PAULUS, SOKOLOWSKI AND SARTOR, LLC – ALL RIGHTS RESERVED.



1/7/2019

CLIENT

PROJECT

NEW JERSEY
CENTER OF EXCELLENCE

1041 N.J.S.H. ROUTE 202/206
BLOCK 483, LOTS 17, 18 & 19

TOWNSHIP OF BRIDGEWATER
SOMERSET COUNTY, NEW JERSEY 08807

SHEET TITLE

DRAINAGE PLAN
(SHEET 4 OF 4)

JOB NO.:	00488.0041
DATE:	01/07/2019
DRAWN:	TB/CY
CHECK:	CH/LAD
SCALE:	1" = 40'

SHEET NO. 13.01 OF 75

C-13.01

FILE NAME: P:\00488\WORKING\CAD\Plotting\C-13.01 DRAINAGE_UTILITY PLAN.dwg | C-13.01 | LAST EDIT: 01/07/2019 - 02:24:37 PM | CADA: tbenninger

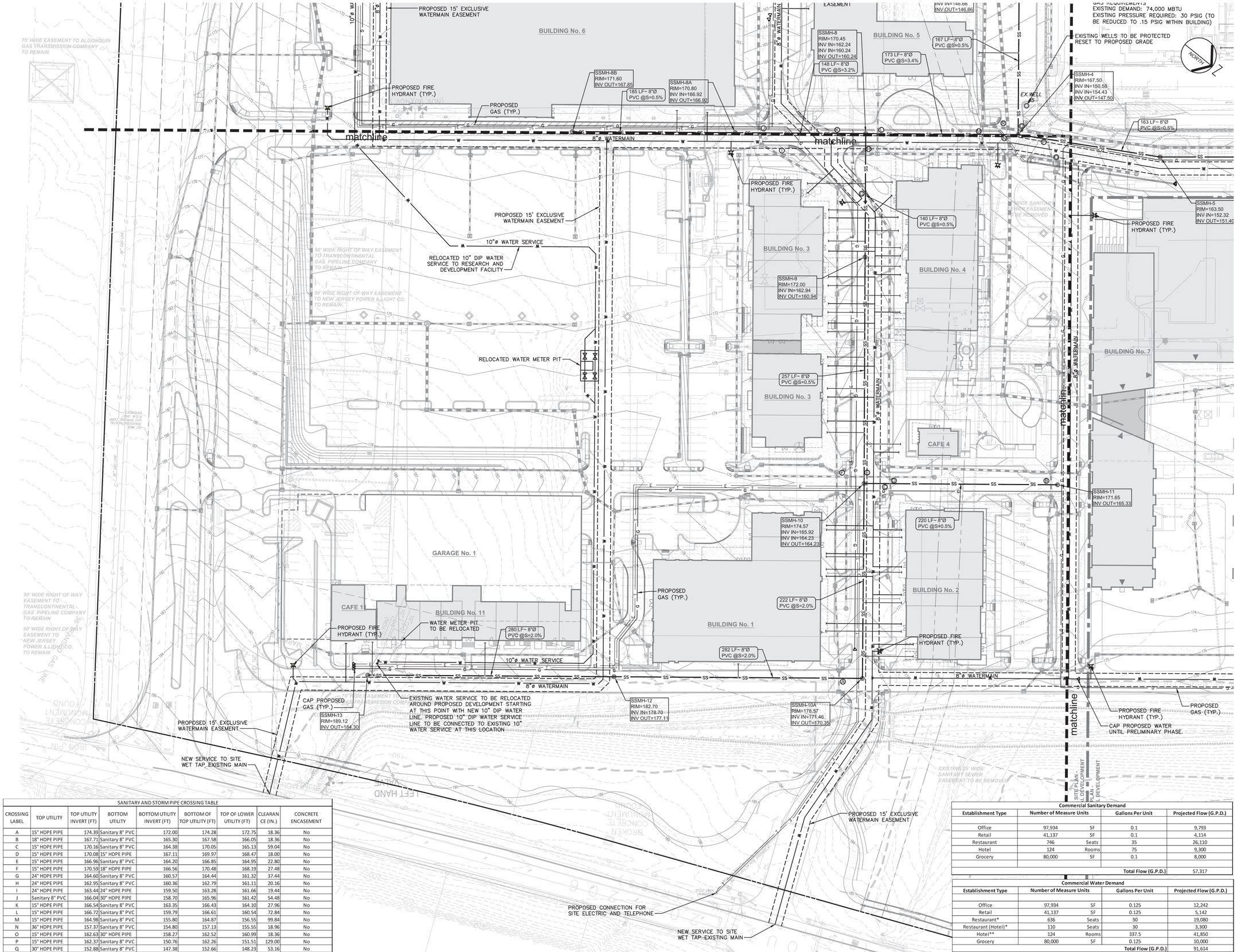

SANITARY AND STORM PIPE CROSSING TABLE								
CROSSING LABEL	TOP UTILITY	TOP UTILITY INVERT (FT)	BOTTOM UTILITY	BOTTOM UTILITY INVERT (FT)	BOTTOM OF TOP UTILITY (FT)	TOP OF LOWER UTILITY (FT)	CLEARANCE (IN.)	CONCRETE ENCASEMENT
A	15" HDPE PIPE	174.39	Sanitary 8" PVC	172.00	174.28	172.75	18.36	No
B	18" HDPE PIPE	167.71	Sanitary 8" PVC	165.30	167.58	166.05	18.36	No
C	15" HDPE PIPE	170.16	Sanitary 8" PVC	164.38	170.05	165.13	59.04	No
D	15" HDPE PIPE	170.08	15" HDPE PIPE	167.11	169.97	168.47	18.00	No
E	15" HDPE PIPE	166.96	Sanitary 8" PVC	164.20	166.85	164.95	22.80	No
F	15" HDPE PIPE	170.59	18" HDPE PIPE	166.56	170.48	168.19	27.48	No
G	24" HDPE PIPE	164.60	Sanitary 8" PVC	160.57	164.44	161.32	37.44	No
H	24" HDPE PIPE	162.95	Sanitary 8" PVC	160.36	162.79	161.11	20.16	No
I	24" HDPE PIPE	163.44	24" HDPE PIPE	159.50	163.28	161.66	19.44	No
J	Sanitary 8" PVC	166.04	30" HDPE PIPE	158.70	165.96	161.42	54.48	No
K	15" HDPE PIPE	166.54	Sanitary 8" PVC	163.35	166.43	164.10	27.96	No
L	15" HDPE PIPE	166.72	Sanitary 8" PVC	159.79	166.61	160.54	72.84	No
M	15" HDPE PIPE	164.98	Sanitary 8" PVC	155.80	164.87	156.55	99.84	No
N	36" HDPE PIPE	157.37	Sanitary 8" PVC	154.80	157.13	155.55	18.96	No
O	15" HDPE PIPE	162.63	30" HDPE PIPE	158.27	162.52	160.99	18.36	No
P	15" HDPE PIPE	162.37	Sanitary 8" PVC	150.76	162.26	151.51	129.00	No
Q	30" HDPE PIPE	152.88	Sanitary 8" PVC	147.38	152.66	148.23	53.16	No
R	36" HDPE PIPE	157.32	30" HDPE PIPE	152.83	157.08	155.55	18.36	No
S	15" HDPE PIPE	156.50	30" HDPE PIPE	151.29	156.39	154.01	28.56	No
T	18" HDPE PIPE	159.64	48" HDPE PIPE	148.15	159.51	152.40	85.32	No
U	15" HDPE PIPE	147.97	Sanitary 8" PVC	133.68	147.86	134.60	159.12	No
V	15" HDPE PIPE	146.95	Sanitary 8" PVC	134.64	146.84	135.56	135.36	No
W	18" HDPE PIPE	145.28	18" HDPE PIPE	142.36	145.15	143.99	13.92	Yes

Commercial Sanitary Demand				
Establishment Type	Number of Measure Units		Gallons Per Unit	Projected Flow (G.P.D.)
Office	97,934	SF	0.1	9,793
Retail	41,137	SF	0.1	4,114
Restaurant	746	Seats	35	26,110
Hotel	124	Rooms	75	9,300
Grocery	80,000	SF	0.1	8,000
			Total Flow (G.P.D.)	57,317

Commercial Water Demand				
Establishment Type	Number of Measure Units		Gallons Per Unit	Projected Flow (G.P.D.)
Office	97,934	SF	0.125	12,242
Retail	41,137	SF	0.125	5,142
Restaurant*	636	Seats	30	19,080
Restaurant (Hotel)*	110	Seats	30	3,300
Hotel**	124	Rooms	337.5	41,850
Grocery	80,000	SF	0.125	10,000
			Total Flow (G.P.D.)	91,614

GRAPHIC SCALE
40 0 20 40 80
(IN FEET)
1 inch = 40 ft.

REV. / ISSUE	DATE	DESCRIPTION
1	11/12/18	REVISED PER BOARD COMMENTS
2	1/07/19	REVISED PER BOARD COMMENTS

CONSULTANT

ORIENTATION / KEY PLAN

PAULUS, SOKOLOWSKI AND SARTOR, LLC
67A MOUNTAIN BLVD EXT.
P.O. BOX 4039
WARREN, NEW JERSEY 07059
PHONE: (732) 560-9700
CERTIFICATE OF AUTHORIZATION NO. 24GA28032700

ALL DIMENSIONS MUST BE VERIFIED BY THE CONTRACTOR. NOTIFY PAULUS, SOKOLOWSKI AND SARTOR, LLC. OF ANY CONFLICTS, ERRORS, AMBIGUITIES OR DISCREPANCIES IN THE CONTRACT DRAWINGS OR SPECIFICATIONS BEFORE PROCEEDING WITH CONSTRUCTION.

ALL DIMENSIONS SHALL BE AS NOTED IN WORDS OR NUMBERS ON THE CONTRACT DRAWINGS. DO NOT SCALE THE DRAWINGS TO DETERMINE DIMENSIONS.

THESE CONTRACT DRAWINGS CONTAIN DATA INTENDED SPECIFICALLY FOR THE NOTED PROJECT ONLY. THEY ARE NOT SUITABLE OR INTENDED FOR USE ON EXTENSIONS OF THIS PROJECT OR FOR REUSE ON ANY OTHER PROJECT.

THE COPYING AND/OR MODIFICATION OF THIS DOCUMENT OR ANY PORTION THEREOF WITHOUT THE WRITTEN PERMISSION OF PAULUS, SOKOLOWSKI AND SARTOR, LLC. IS PROHIBITED.

UNLESS THESE DRAWINGS ARE SPECIFICALLY DESIGNATED AS "CONSTRUCTION ISSUE", THESE DRAWINGS SHALL NOT BE USED FOR CONSTRUCTION OR IMPROVEMENTS DEPICTED HEREIN. CONTRACTORS SHALL NOTIFY THE DESIGN ENGINEER TO OBTAIN CONSTRUCTION DOCUMENTS.

COPYRIGHT 2019 PAULUS, SOKOLOWSKI AND SARTOR, LLC – ALL RIGHTS RESERVED.

JASON T. KASS — LICENSED PROFESSIONAL ENGINEER — 37067
1/7/2019

CLIENT

PROJECT

NEW JERSEY
CENTER OF EXCELLENCE

1041 N.J.S.H. ROUTE 202/206
BLOCK 483, LOTS 17, 18 & 19

TOWNSHIP OF BRIDGEWATER
SOMERSET COUNTY, NEW JERSEY 08807

SHEET TITLE

UTILITY PLAN
(SHEET 1 OF 4)

JOB NO.:	00488.0041
DATE:	05/09/2018
DRAWN:	TB/CY
CHECK:	CH/LAD
SCALE:	1" = 40'
SHEET NO.	14 OF 75

C-14

FILE NAME: P:\00488\0041\DWG\C-Cad\Package\C14-UTILITIES.dwg C14 LAST EDIT: 01/07/2019 02:34:51 PM JOHN Bennington

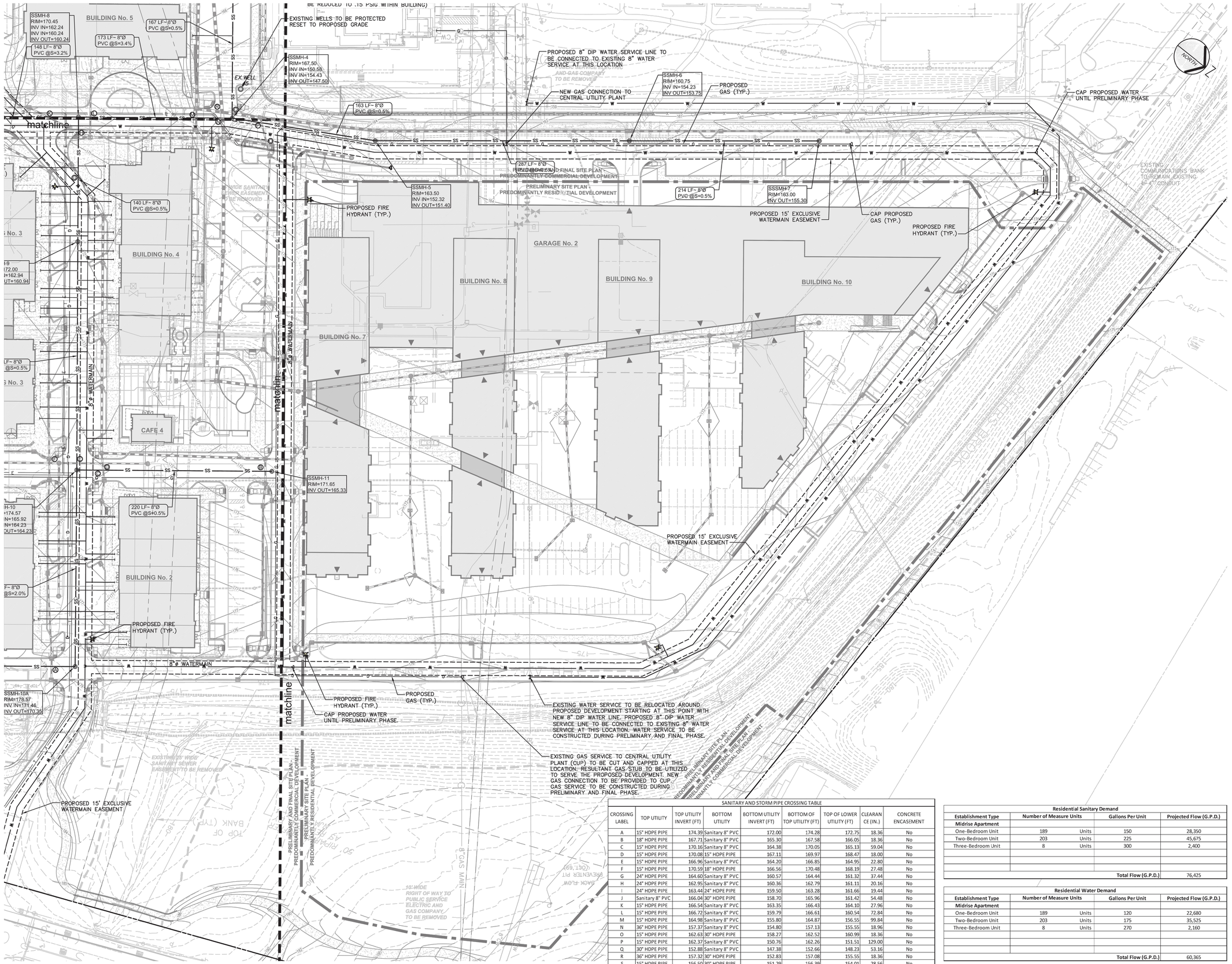

SANITARY AND STORM PIPE CROSSING TABLE							
CROSSING LABEL	TOP UTILITY	TOP UTILITY INVERT (FT)	BOTTOM UTILITY	BOTTOM UTILITY INVERT (FT)	BOTTOM OF TOP UTILITY (FT)	TOP OF LOWER UTILITY (FT)	CLEARANCE (IN.)	CONCRETE ENCASEMENT
A	15" HDPE PIPE	174.39	Sanitary 8" PVC	172.00	174.28	172.75	18.36	No
B	18" HDPE PIPE	167.71	Sanitary 8" PVC	165.30	167.58	166.05	18.36	No
C	15" HDPE PIPE	170.16	Sanitary 8" PVC	164.38	170.05	165.13	59.04	No
D	15" HDPE PIPE	170.08	15" HDPE PIPE	167.11	169.97	168.47	18.00	No
E	15" HDPE PIPE	166.96	Sanitary 8" PVC	164.20	166.85	164.95	22.80	No
F	15" HDPE PIPE	170.59	18" HDPE PIPE	166.56	170.48	168.19	27.48	No
G	24" HDPE PIPE	164.60	Sanitary 8" PVC	160.57	164.44	161.32	37.44	No
H	24" HDPE PIPE	162.95	Sanitary 8" PVC	160.36	162.79	161.11	20.16	No
I	24" HDPE PIPE	163.44	24" HDPE PIPE	159.50	163.28	161.66	19.44	No
J	Sanitary 8" PVC	166.04	30" HDPE PIPE	158.70	165.96	161.42	54.48	No
K	15" HDPE PIPE	166.54	Sanitary 8" PVC	163.35	166.43	164.10	27.96	No
L	15" HDPE PIPE	166.72	Sanitary 8" PVC	159.79	166.61	160.54	72.84	No
M	15" HDPE PIPE	164.98	Sanitary 8" PVC	155.80	164.87	156.55	99.84	No
N	36" HDPE PIPE	157.37	Sanitary 8" PVC	154.80	157.13	155.55	18.96	No
O	15" HDPE PIPE	162.63	30" HDPE PIPE	158.27	162.52	160.99	18.36	No
P	15" HDPE PIPE	162.37	Sanitary 8" PVC	150.76	162.26	151.51	129.00	No
Q	30" HDPE PIPE	152.88	Sanitary 8" PVC	147.38	152.66	148.23	53.16	No
R	36" HDPE PIPE	157.32	30" HDPE PIPE	152.83	157.08	155.55	18.36	No
S	15" HDPE PIPE	156.50	30" HDPE PIPE	151.29	156.39	154.01	28.56	No
T	18" HDPE PIPE	159.64	48" HDPE PIPE	148.15	159.51	152.40	85.32	No
U	15" HDPE PIPE	147.97	Sanitary 8" PVC	133.68	147.86	134.60	159.12	No
V	15" HDPE PIPE	146.95	Sanitary 8" PVC	134.64	146.84	135.56	135.36	No
W	18" HDPE PIPE	145.28	18" HDPE PIPE	142.36	145.15	143.99	13.92	Yes

Residential Sanitary Demand				
Establishment Type	Number of Measure Units		Gallons Per Unit	Projected Flow (G.P.D.)
Midrise Apartment				
One-Bedroom Unit	189	Units	150	28,350
Two-Bedroom Unit	203	Units	225	45,675
Three-Bedroom Unit	8	Units	300	2,400
			Total Flow (G.P.D.)	76,425

Residential Water Demand				
Establishment Type	Number of Measure Units		Gallons Per Unit	Projected Flow (G.P.D.)
Midrise Apartment				
One-Bedroom Unit	189	Units	120	22,680
Two-Bedroom Unit	203	Units	175	35,525
Three-Bedroom Unit	8	Units	270	2,160
			Total Flow (G.P.D.)	60,365

GRAPHIC SCALE
40 0 20 40 80
(IN FEET)
1 inch = 40 ft.

REV. / ISSUE	DATE	DESCRIPTION
1	11/12/18	REVISED PER BOARD COMMENTS
2	1/07/19	REVISED PER BOARD COMMENTS

CONSULTANT

ORIENTATION / KEY PLAN

PAULUS, SOKOLOWSKI AND SARTOR, LLC
67A MOUNTAIN BLVD EXT.
P.O. BOX 4039
WARREN, NEW JERSEY 07059
PHONE: (732) 560-9700
CERTIFICATE OF AUTHORIZATION NO. 24GA28032700

ALL DIMENSIONS MUST BE VERIFIED BY THE CONTRACTOR. NOTIFY PAULUS, SOKOLOWSKI AND SARTOR, LLC OF ANY DISCREPANCIES OR OMISSIONS BETWEEN THE CONTRACT DRAWINGS OR SPECIFICATIONS BEFORE PROCEEDING WITH CONSTRUCTION.

ALL DIMENSIONS SHALL BE AS NOTED IN WORDS OR NUMBERS ON THE CONTRACT DRAWINGS. DO NOT SCALE THE DRAWINGS TO DETERMINE DIMENSIONS.

THESE CONTRACT DRAWINGS CONTAIN DATA INTENDED SPECIFICALLY FOR THE NOTED PROJECT AND CLIENT. THEY ARE NOT INTENDED FOR USE ON EXTENSIONS OF THIS PROJECT OR FOR REUSE ON ANY OTHER PROJECT.

THE COPYING AND/OR MODIFICATION OF THIS DOCUMENT OR ANY PORTION THEREOF WITHOUT THE WRITTEN PERMISSION OF PAULUS, SOKOLOWSKI AND SARTOR, LLC IS PROHIBITED.

UNLESS THESE DRAWINGS ARE SPECIFICALLY DESIGNATED AS "CONSTRUCTION ISSUE", THESE DRAWINGS SHALL NOT BE USED FOR CONSTRUCTION OR IMPLEMENTATION PURPOSES. CONTRACTORS SHALL NOTIFY THE DESIGN ENGINEER TO OBTAIN CONSTRUCTION DOCUMENTS.

COPYRIGHT 2019 PAULUS, SOKOLOWSKI AND SARTOR, LLC – ALL RIGHTS RESERVED.



1/7/2019

CLIENT

PROJECT

NEW JERSEY
CENTER OF EXCELLENCE

1041 N.J.S.H. ROUTE 202/206
BLOCK 483, LOTS 17, 18 & 19

TOWNSHIP OF BRIDGEWATER
SOMERSET COUNTY, NEW JERSEY 08807

SHEET TITLE

UTILITY PLAN
(SHEET 2 OF 4)

JOB NO.:	00488.0041
DATE:	05/09/2018
DRAWN:	TB/CY
CHECK:	CH/LAD
SCALE:	1" = 40'

SHEET NO. 15 OF 75

C-15

FILE NAME: P:\00488\001\DWG\ACAD\Plotting\C15-18 DRAINAGE_UTILITY PLAN.dwg | C15 | LAST EDIT: 01/07/2019 - 03:05:39 PM | CHAN, Nannapat

SANITARY AND STORM PIPE CROSSING TABLE								
CROSSING LABEL	TOP UTILITY	TOP UTILITY INVERT (FT)	BOTTOM UTILITY	BOTTOM UTILITY INVERT (FT)	BOTTOM OF TOP UTILITY (FT)	TOP OF LOWER UTILITY (FT)	CLEARANCE (IN.)	CONCRETE ENCASEMENT
A	15" HDPE PIPE	174.39	Sanitary 8" PVC	172.00	174.28	172.75	18.36	No
B	18" HDPE PIPE	167.71	Sanitary 8" PVC	165.30	167.58	166.05	18.36	No
C	15" HDPE PIPE	170.16	Sanitary 8" PVC	164.38	170.05	165.13	59.04	No
D	15" HDPE PIPE	170.08	15" HDPE PIPE	167.11	169.97	168.47	18.00	No
E	15" HDPE PIPE	166.96	Sanitary 8" PVC	164.20	166.85	164.95	22.80	No
F	15" HDPE PIPE	170.59	18" HDPE PIPE	166.56	170.48	168.19	27.48	No
G	24" HDPE PIPE	164.60	Sanitary 8" PVC	160.57	164.44	161.32	37.44	No
H	24" HDPE PIPE	162.95	Sanitary 8" PVC	160.36	162.79	161.11	20.16	No
I	24" HDPE PIPE	163.44	24" HDPE PIPE	159.50	163.28	161.66	19.44	No
J	Sanitary 8" PVC	166.04	30" HDPE PIPE	158.70	165.96	161.42	54.48	No
K	15" HDPE PIPE	166.54	Sanitary 8" PVC	163.35	166.43	164.10	27.96	No
L	15" HDPE PIPE	166.72	Sanitary 8" PVC	159.79	166.61	160.54	72.84	No
M	15" HDPE PIPE	164.98	Sanitary 8" PVC	155.80	164.87	156.55	99.84	No
N	36" HDPE PIPE	157.37	Sanitary 8" PVC	154.80	157.13	155.55	18.96	No
O	15" HDPE PIPE	162.63	30" HDPE PIPE	158.27	162.52	160.99	18.36	No
P	15" HDPE PIPE	162.37	Sanitary 8" PVC	150.76	162.26	151.51	129.00	No
Q	30" HDPE PIPE	152.88	Sanitary 8" PVC	147.38	152.66	148.23	53.16	No
R	36" HDPE PIPE	157.32	30" HDPE PIPE	152.83	157.08	155.55	18.36	No
S	15" HDPE PIPE	156.50	30" HDPE PIPE	151.29	156.39	154.01	28.56	No
T	18" HDPE PIPE	159.64	48" HDPE PIPE	148.15	159.51	152.40	85.32	No
U	15" HDPE PIPE	147.97	Sanitary 8" PVC	133.68	147.86	134.60	159.12	No
V	15" HDPE PIPE	146.95	Sanitary 8" PVC	134.64	146.84	135.56	135.36	No
W	18" HDPE PIPE	145.28	18" HDPE PIPE	142.36	145.15	143.99	13.92	Yes

Commercial Sanitary Demand				
Establishment Type	Number of Measure Units		Gallons Per Unit	Projected Flow (G.P.D.)
Office	97,934	SF	0.1	9,793
Retail	41,137	SF	0.1	4,114
Restaurant	746	Seats	35	26,110
Hotel	124	Rooms	75	9,300
Grocery	80,000	SF	0.1	8,000
			Total Flow (G.P.D.)	57,317

Commercial Water Demand				
Establishment Type	Number of Measure Units		Gallons Per Unit	Projected Flow (G.P.D.)
Office	97,934	SF	0.125	12,242
Retail	41,137	SF	0.125	5,142
Restaurant*	636	Seats	30	19,080
Restaurant (Hotel)*	110	Seats	30	3,300
Hotel**	124	Rooms	337.5	41,850
Grocery	80,000	SF	0.125	10,000
			Total Flow (G.P.D.)	91,614

REV. / ISSUE	DATE	DESCRIPTION
1	11/12/18	REVISED PER BOARD COMMENTS
2	1/07/19	REVISED PER BOARD COMMENTS

CONSULTANT

ORIENTATION / KEY PLAN

PAULUS, SOKOLOWSKI AND SARTOR, LLC

67A MOUNTAIN BLVD EXT.
P.O. BOX 4039
WARREN, NEW JERSEY 07059
PHONE: (732) 560-9700

CERTIFICATE OF AUTHORIZATION NO. 24GA28032700

ALL DIMENSIONS MUST BE VERIFIED BY THE CONTRACTOR. NOTIFY PAULUS, SOKOLOWSKI AND SARTOR, LLC. OF ANY CONFLICTS, ERRORS, AMBIGUITIES OR DISCREPANCIES IN THE CONTRACT DRAWINGS OR SPECIFICATIONS BEFORE PROCEEDING WITH CONSTRUCTION.

ALL DIMENSIONS SHALL BE AS NOTED IN WORDS OR NUMBERS ON THE CONTRACT DRAWINGS. DO NOT SCALE THE DRAWINGS TO OBTAIN DIMENSIONS.

THESE CONTRACT DRAWINGS CONTAIN DATA INTENDED SPECIFICALLY FOR THE NOTED PROJECT ONLY. THEY ARE NOT SUITABLE OR INTENDED FOR USE ON EXTENSIONS OF THIS PROJECT OR FOR REUSE ON ANY OTHER PROJECT.

THE COPYING AND/OR MODIFICATION OF THIS DOCUMENT OR ANY PORTION THEREOF WITHOUT THE WRITTEN PERMISSION OF PAULUS, SOKOLOWSKI AND SARTOR, LLC. IS PROHIBITED.

UNLESS THESE DRAWINGS ARE SPECIFICALLY DESIGNATED AS "CONSTRUCTION ISSUE", THESE DRAWINGS SHALL NOT BE USED FOR CONSTRUCTION OR IMPROVEMENTS DEPICTED HEREIN. CONTRACTORS SHALL NOTIFY THE DESIGN ENGINEER TO OBTAIN CONSTRUCTION DOCUMENTS.

COPYRIGHT 2019 PAULUS, SOKOLOWSKI AND SARTOR, LLC – ALL RIGHTS RESERVED.

1/7/2019

CLIENT

PROJECT

NEW JERSEY
CENTER OF EXCELLENCE

1041 N.J.S.H. ROUTE 202/206
BLOCK 483, LOTS 17, 18 & 19

TOWNSHIP OF BRIDGEWATER
SOMERSET COUNTY, NEW JERSEY 08807

SHEET TITLE

UTILITY PLAN
(SHEET 3 OF 4)

JOB NO.:	00488.0041
DATE:	05/09/2018
DRAWN:	TB/CY
CHECK:	CH/LAD
SCALE:	1" = 40'

SHEET NO. 16 OF 75

C-16

GRAPHIC SCALE
40 0 20 40 80
(IN FEET)
1 inch = 40 ft.

FILE NAME: P:\00488\001\DWG\Civil\Plan\sheet\C16-UTILITY PLAN.dwg | LAST EDIT: 01/07/2019 - 02:03:11 PM | CADIN, Sean.Hagan

SANITARY AND STORM PIPE CROSSING TABLE

CROSSING LABEL	TOP UTILITY	TOP UTILITY INVERT (FT)	BOTTOM UTILITY	BOTTOM UTILITY INVERT (FT)	BOTTOM OF TOP UTILITY (FT)	TOP OF LOWER UTILITY (FT)	CLEARANCE (IN.)	CONCRETE ENCASEMENT
A	15" HDPE PIPE	174.39	Sanitary 8" PVC	172.00	174.28	172.75	18.36	No
B	18" HDPE PIPE	167.71	Sanitary 8" PVC	165.30	167.58	166.05	18.36	No
C	15" HDPE PIPE	170.16	Sanitary 8" PVC	164.38	170.05	165.13	59.04	No
D	15" HDPE PIPE	170.08	15" HDPE PIPE	167.11	169.97	168.47	18.00	No
E	15" HDPE PIPE	166.96	Sanitary 8" PVC	164.20	166.85	164.95	22.80	No
F	15" HDPE PIPE	170.59	18" HDPE PIPE	166.56	170.48	168.19	27.48	No
G	24" HDPE PIPE	164.60	Sanitary 8" PVC	160.57	164.44	161.32	37.44	No
H	24" HDPE PIPE	162.95	Sanitary 8" PVC	160.36	162.79	161.11	20.16	No
I	24" HDPE PIPE	163.44	24" HDPE PIPE	159.50	163.28	161.66	19.44	No
J	Sanitary 8" PVC	166.04	30" HDPE PIPE	158.70	165.96	161.42	54.48	No
K	15" HDPE PIPE	166.54	Sanitary 8" PVC	163.35	166.43	164.10	27.96	No
L	15" HDPE PIPE	166.72	Sanitary 8" PVC	159.79	166.61	160.54	72.84	No
M	15" HDPE PIPE	164.98	Sanitary 8" PVC	155.80	164.87	156.55	99.84	No
N	36" HDPE PIPE	157.37	Sanitary 8" PVC	154.80	157.13	155.55	18.96	No
O	15" HDPE PIPE	162.63	30" HDPE PIPE	158.27	162.52	160.99	18.36	No
P	15" HDPE PIPE	162.37	Sanitary 8" PVC	150.76	162.26	151.51	129.00	No
Q	30" HDPE PIPE	152.88	Sanitary 8" PVC	147.38	152.66	148.23	53.16	No
R	36" HDPE PIPE	157.32	30" HDPE PIPE	152.83	157.08	155.55	18.36	No
S	15" HDPE PIPE	156.50	30" HDPE PIPE	151.29	156.39	154.01	28.56	No
T	18" HDPE PIPE	159.64	48" HDPE PIPE	148.15	159.51	152.40	85.32	No
U	15" HDPE PIPE	147.97	Sanitary 8" PVC	133.68	147.86	134.60	159.12	No
V	15" HDPE PIPE	146.95	Sanitary 8" PVC	134.64	146.84	135.56	135.36	No
W	18" HDPE PIPE	145.28	18" HDPE PIPE	142.36	145.15	143.99	13.92	Yes

Commercial Sanitary Demand

Establishment Type	Number of Measure Units		Gallons Per Unit	Projected Flow (G.P.D.)
Office	97,934	SF	0.1	9,793
Retail	41,137	SF	0.1	4,114
Restaurant	746	Seats	35	26,110
Hotel	124	Rooms	75	9,300
Grocery	80,000	SF	0.1	8,000
			Total Flow (G.P.D.)	57,317

Commercial Water Demand

Establishment Type	Number of Measure Units		Gallons Per Unit	Projected Flow (G.P.D.)
Office	97,934	SF	0.125	12,242
Retail	41,137	SF	0.125	5,142
Restaurant*	636	Seats	30	19,080
Restaurant (Hotel)*	110	Seats	30	3,300
Hotel**	124	Rooms	337.5	41,850
Grocery	80,000	SF	0.125	10,000
			Total Flow (G.P.D.)	91,614

NORTH

50' WIDE RIGHT OF WAY EASEMENT TO TRANSCONTINENTAL GAS PIPELINE COMPANY TO REMAIN

150' WIDE RIGHT OF WAY EASEMENT TO PUBLIC SERVICE POWER & LIGHT CO. TO REMAIN

70' WIDE EASEMENT TO ALGONQUIN GAS TRANSMISSION COMPANY TO REMAIN

25' SANITARY SEWER EASEMENT TO REMAIN

STORMWATER MANAGEMENT BASIN
W.Q. SAND FILTER

SECTION A-A SEE DETAIL

SECTION B-B SEE DETAIL

RELOCATED FIRE HYDRANT (TYP.)

RELOCATE EXISTING FIRE HYDRANT

RELOCATED 10" DIP WATER SERVICE TO RESEARCH AND DEVELOPMENT FACILITY

CONCRETE ENCASEMENT

10"ø WATER SERVICE

MAIN ELECTRIC TRUNK TO REMAIN AND BE

EXISTING 25' WIDE SANITARY SEWER EASEMENT TO REMAIN

DOGHOUSE SSMH-1
RIM=151.59
INV IN=133.62
INV OUT=133.60 (VERIFY IN FIELD)

RESET EXISTING ELECTRICAL MANHOLE TO ELEV. 151.00

142 LF~ 10"Ø PVC @S=0.6%

WET TAP EXISTING 4" WATER LINE TO PROPOSED 10" WATER SERVICE LINE

SSMH-2
RIM=150.57
INV IN=134.54
INV IN=143.52
INV OUT=134.54

CAP EXISTING 8"

MATCHLINE SHEET C-16.01

MATCHLINE SHEET C-16

NO GAS CONNECTIONS TO ANY EXISTING BUILDINGS (EXCEPT FOR CENTRAL UTILITY PLANT) WITHIN THE RESEARCH AND DEVELOPMENT CAMPUS (OR/D ZONE)

GRAPHIC SCALE
40 0 20 40 80
(IN FEET)
1 inch = 40 ft.

REV. / ISSUE	DATE	DESCRIPTION

CONSULTANT

ORIENTATION / KEY PLAN

PAULUS, SOKOLOWSKI AND SARTOR, LLC
67A MOUNTAIN BLVD EXT.
P.O. BOX 4039
WARREN, NEW JERSEY 07059
PHONE: (732) 560-9700
CERTIFICATE OF AUTHORIZATION NO. 24GA28032700

ALL DIMENSIONS MUST BE VERIFIED BY THE CONTRACTOR, NOTIFY PAULUS, SOKOLOWSKI AND SARTOR, LLC OF ANY DISCREPANCIES OR OMISSIONS BEFORE PROCEEDING WITH THE CONTRACT DRAWINGS OR SPECIFICATIONS, BEFORE PROCEEDING WITH CONSTRUCTION.

ALL DIMENSIONS SHALL BE AS NOTED IN WORDS OR NUMBERS ON THE CONTRACT DRAWINGS. DO NOT SCALE THE DRAWINGS TO DETERMINE DIMENSIONS.

THESE CONTRACT DRAWINGS CONTAIN DATA INTENDED SPECIFICALLY FOR THE NOTED PROJECT AND CLIENT, THEY ARE NOT INTENDED FOR USE ON EXTENSIONS OF THIS PROJECT OR FOR REUSE ON ANY OTHER PROJECT.

THE COPYING AND/OR MODIFICATION OF THIS DOCUMENT OR ANY PORTION THEREOF WITHOUT THE WRITTEN PERMISSION OF PAULUS, SOKOLOWSKI AND SARTOR, LLC. IS PROHIBITED.

UNLESS THESE DRAWINGS ARE SPECIFICALLY DESIGNATED AS "CONSTRUCTION ISSUE", THESE DRAWINGS SHALL NOT BE USED FOR CONSTRUCTION OR IMPROVEMENTS DEPICTED HEREIN. CONTRACTORS SHALL NOTIFY THE DESIGN ENGINEER TO OBTAIN CONSTRUCTION DOCUMENTS.

COPYRIGHT 2019 PAULUS, SOKOLOWSKI AND SARTOR, LLC – ALL RIGHTS RESERVED.

STATE OF NEW JERSEY
37067
LICENSED PROFESSIONAL ENGINEER
1/7/2019

CLIENT

PROJECT

NEW JERSEY
CENTER OF EXCELLENCE

1041 N.J.S.H. ROUTE 202/206
BLOCK 483, LOTS 17, 18 & 19

TOWNSHIP OF BRIDGEWATER
SOMERSET COUNTY, NEW JERSEY 08807

SHEET TITLE

UTILITY PLAN
(SHEET 4 OF 4)

JOB NO.:	00488.0041
DATE:	01/07/2019
DRAWN:	TB/CY
CHECK:	CH/LAD
SCALE:	1" = 40'

SHEET NO. 16.01 OF 75

C-16.01

FILE NAME: P:\00488\Work\Civil\Cad\Plotting\C-16.01 STORMWATER_UTILITY PLAN.dwg | C-16.01 | LAST EDIT: 01/07/2019, 02:03:32 PM | CIVIL 3d engineering

REV. / ISSUE	DATE	DESCRIPTION
1	11/12/18	REVISED PER BOARD COMMENTS
2	1/07/19	REVISED PER BOARD COMMENTS

CONSULTANT

ORIENTATION / KEY PLAN

PAULUS, SOKOLOWSKI AND SARTOR, LLC

67A MOUNTAIN BLVD EXT.
P.O. BOX 4039
WARREN, NEW JERSEY 07059
PHONE: (732) 560-9700

CERTIFICATE OF AUTHORIZATION NO. 24GA28032700

ALL DIMENSIONS MUST BE VERIFIED BY THE CONTRACTOR. NOTIFY PAULUS, SOKOLOWSKI AND SARTOR, LLC. OF ANY CONFLICTS, ERRORS, AMBIGUITIES OR DISCREPANCIES IN THE CONTRACT DRAWINGS OR SPECIFICATIONS BEFORE PROCEEDING WITH CONSTRUCTION.

ALL DIMENSIONS SHALL BE AS NOTED IN WORDS OR NUMBERS ON THE CONTRACT DRAWINGS. DO NOT SCALE THE DRAWINGS TO DETERMINE DIMENSIONS.

THESE CONTRACT DRAWINGS CONTAIN DATA INTENDED SPECIFICALLY FOR THE NOTED PROJECT AND SITE. THEY ARE NOT INTENDED FOR USE ON EXTENSIONS OF THIS PROJECT OR FOR REUSE ON ANY OTHER PROJECT.

THE COPYING AND/OR MODIFICATION OF THIS DOCUMENT OR ANY PORTION THEREOF WITHOUT THE WRITTEN PERMISSION OF PAULUS, SOKOLOWSKI AND SARTOR, LLC. IS PROHIBITED.

UNLESS THESE DRAWINGS ARE SPECIFICALLY DESIGNATED AS "CONSTRUCTION ISSUE", THESE DRAWINGS SHALL NOT BE USED FOR CONSTRUCTION OR IMPROVEMENTS DEPICTED HEREIN. CONTRACTORS SHALL NOTIFY THE DESIGN ENGINEER TO OBTAIN CONSTRUCTION DOCUMENTS.

COPYRIGHT 2019 PAULUS, SOKOLOWSKI AND SARTOR, LLC – ALL RIGHTS RESERVED.

JOSEPH A. CHILLARI JR. — NEW JERSEY — LICENSE NO. 37067 — LICENSED PROFESSIONAL ENGINEER

1/7/2019

CLIENT

PROJECT

NEW JERSEY CENTER OF EXCELLENCE

1041 N.J.S.H. ROUTE 202/206
BLOCK 483, LOTS 17, 18 & 19

TOWNSHIP OF BRIDGEWATER
SOMERSET COUNTY, NEW JERSEY 08807

SHEET TITLE

PROFILE ALIGNMENTS (SHEET 1 OF 18)

JOB NO.:	00488.0041
DATE:	05/09/2018
DRAWN:	TB/CY
CHECK:	CH/LAD
SCALE:	1" = 60'

SHEET NO. 16.02 OF 75

C-16.02

PROFILE FROM STA. 11+60.90 TO STA. 23+33.47 TO BE PROVIDED IN FINAL PLANS FOR RESIDENTIAL AREA

PRELIMINARY SITE PLAN - PREDOMINANTLY RESIDENTIAL DEVELOPMENT. PRELIMINARY AND FINAL SITE PLAN - PREDOMINANTLY COMMERCIAL DEVELOPMENT

Graphic Scale

60 0 30 60 120 240

(IN FEET)
1 inch = 60 ft.

FILE NAME: P:\00488\041\ENGR\Cad\Plans\pgc15-1PROFILES.dwg, 12-6-32, JUST EDIT, 01/07/2019 - 02:34:34 PM, ACAD 18 (formatted)

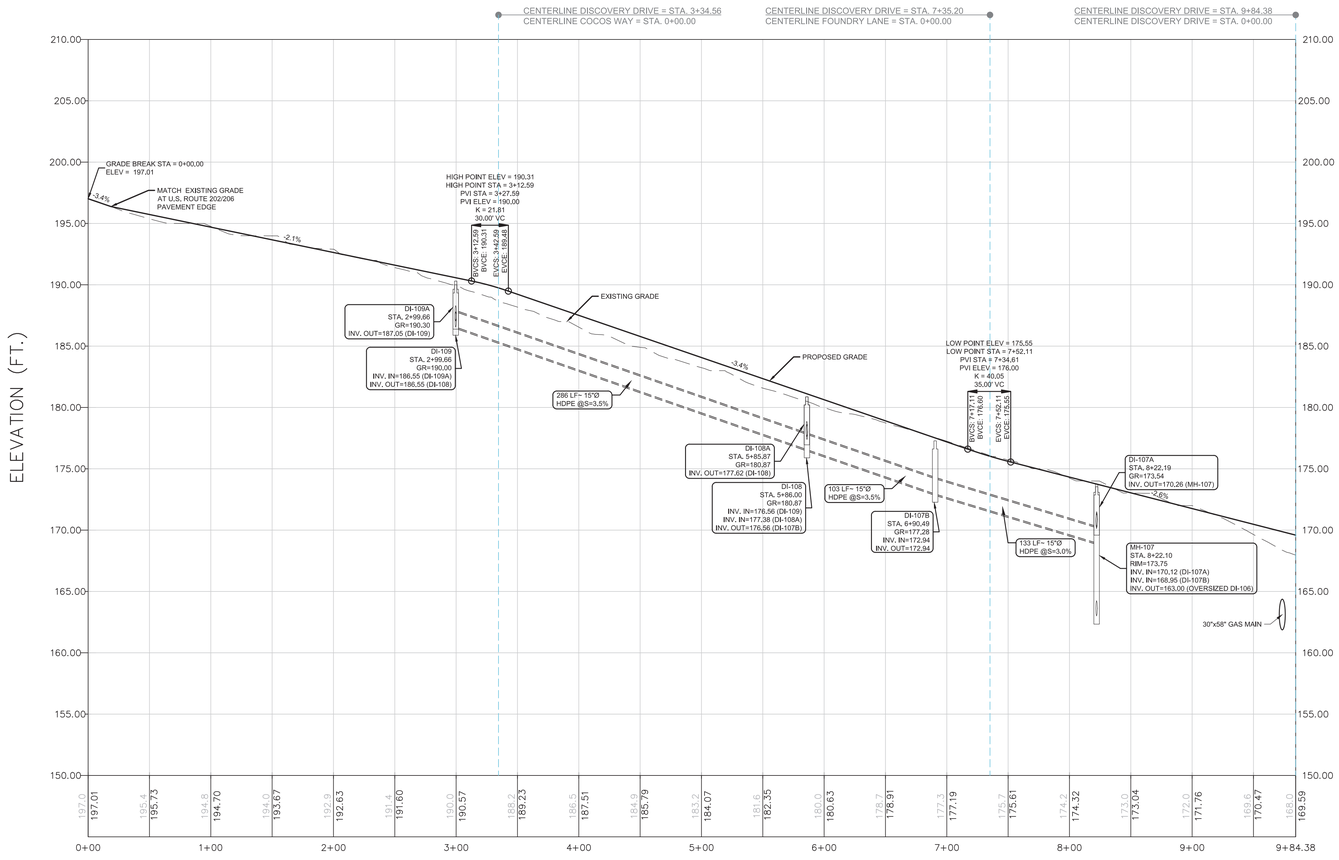

PROFILE OF ALIGNMENT - DISCOVERY DRIVE

VERTICAL SCALE

5 0 2.5 5 10 20

(IN FEET)
1 inch = 5 ft.

HORIZONTAL SCALE

50 0 25 50 100 200

(IN FEET)
1 inch = 50 ft.

REV. / ISSUE	DATE	DESCRIPTION
1	11/12/18	REVISED PER BOARD COMMENTS
2	1/07/19	REVISED PER BOARD COMMENTS

CONSULTANT

ORIENTATION / KEY PLAN

PAULUS, SOKOLOWSKI AND SARTOR, LLC

67A MOUNTAIN BLVD EXT.
P.O. BOX 4039
WARREN, NEW JERSEY 07059
PHONE: (732) 560-9700

CERTIFICATE OF AUTHORIZATION NO. 24GA28032700

ALL DIMENSIONS MUST BE VERIFIED BY THE CONTRACTOR. NOTIFY PAULUS, SOKOLOWSKI AND SARTOR, LLC OF ANY CONFLICTS, ERRORS, AMBIGUITIES OR DISCREPANCIES IN THE CONTRACT DRAWING OR SPECIFICATIONS BEFORE PROCEEDING WITH CONSTRUCTION.

ALL DIMENSIONS SHALL BE AS NOTED IN WORDS OF NUMBERS ON THE CONTRACT DRAWINGS. DO NOT SCALE THE DRAWINGS TO OBTAIN DIMENSIONS.

THESE CONTRACT DRAWINGS CONTAIN DATA INTENDED SPECIFICALLY FOR THE NOTED PROJECT. THEY ARE NOT TO BE USED IN WHOLE OR IN PART FOR USE ON EXTENSIONS OF THIS PROJECT OR FOR REUSE ON ANY OTHER PROJECT.

THE COPYING AND/OR MODIFICATION OF THIS DOCUMENT OR ANY PORTION THEREOF WITHOUT THE WRITTEN PERMISSION OF PAULUS, SOKOLOWSKI AND SARTOR, LLC. IS PROHIBITED.

UNLESS THESE DRAWINGS ARE SPECIFICALLY DESIGNATED AS "CONSTRUCTION ISSUE", THESE DRAWINGS SHALL NOT BE USED FOR CONSTRUCTION OR IMPROVEMENTS DEPICTED THEREON. CONTRACTORS SHALL NOTIFY THE DESIGN ENGINEER TO OBTAIN CONSTRUCTION DOCUMENTS.

COPYRIGHT 2018 PAULUS, SOKOLOWSKI AND SARTOR, LLC. – ALL RIGHTS RESERVED.



1/7/2019

CLIENT

PROJECT

NEW JERSEY
CENTER OF EXCELLENCE

1041 N.J.S.H. ROUTE 202/206
BLOCK 483, LOTS 17, 18 & 19

TOWNSHIP OF BRIDGEWATER
SOMERSET COUNTY, NEW JERSEY 08807

SHEET TITLE

PROFILES
(SHEET 2 OF 18)

JOB NO.:	00488.0041
DATE:	05/09/2018
DRAWN:	TB/CY
CHECK:	CH/LAD
SCALE:	Horizontal: 1" = 50' Vertical: 1" = 5'

SHEET NO. 16.03 OF 75

C-16.03

FILE NAME: P:\00488\0041\DWG\C-Civil\Plotting\C16-3 PROFILES.dwg, C-16.03, LAST EDIT: 01/07/2019 - 02:11:04 PM, LOGIN: flemming

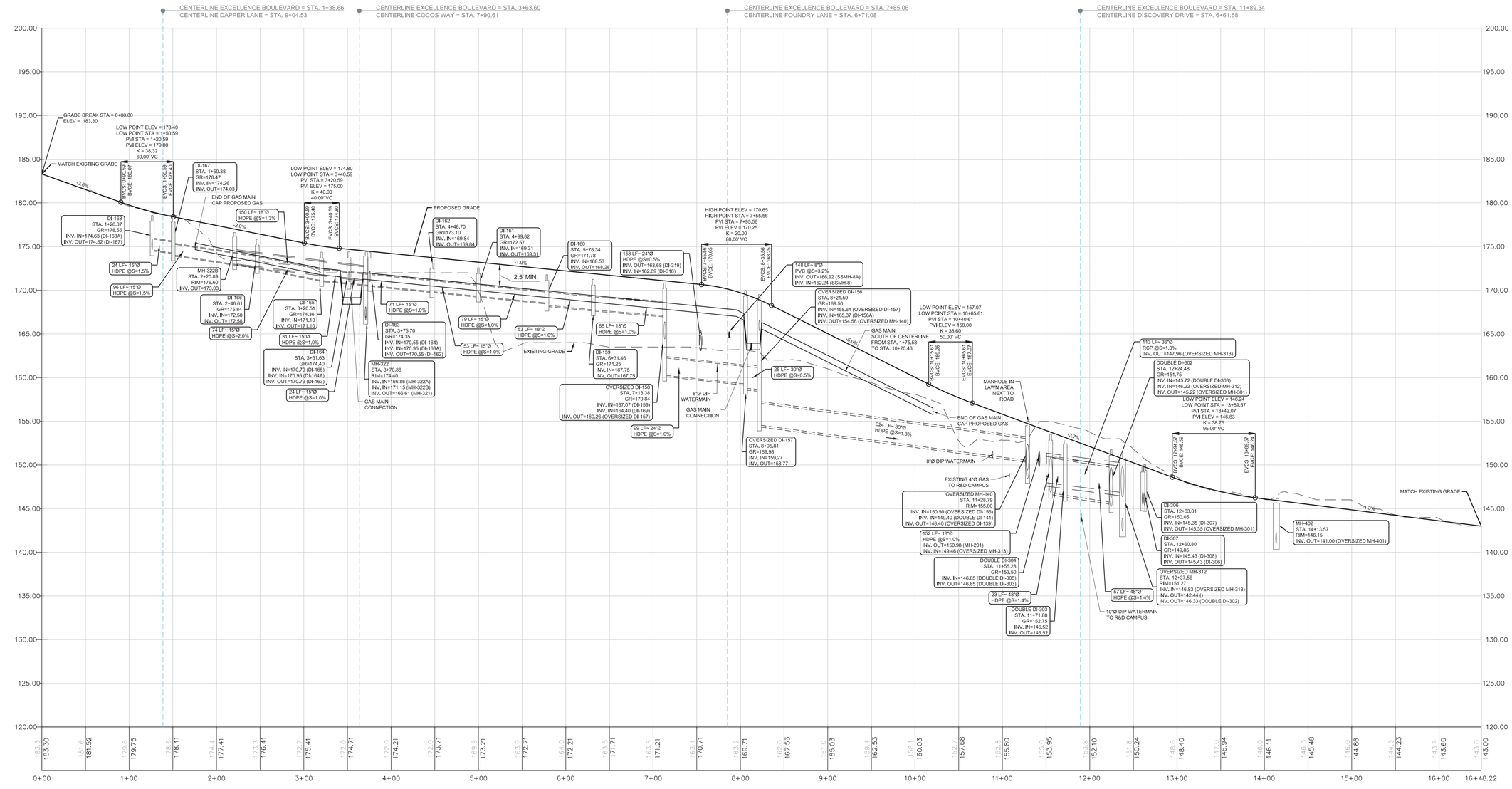

PROFILE OF ALIGNMENT - EXCELLENCE BOULEVARD AND DISCOVERY DRIVE SOUTH OF CENTERLINE

VERTICAL SCALE

5 0 2.5 5 10 20

(IN FEET)
1 inch = 5 ft.

HORIZONTAL SCALE

50 0 25 50 100 200

(IN FEET)
1 inch = 50 ft.

REV. / ISSUE	DATE	DESCRIPTION
1	11/12/18	REVISED PER BOARD COMMENTS
2	1/07/19	REVISED PER BOARD COMMENTS

CONSULTANT

ORIENTATION / KEY PLAN

PAULUS, SOKOLOWSKI AND SARTOR, LLC
67A MOUNTAIN BLVD EXT.
P.O. BOX 4039
WARREN, NEW JERSEY 07059
PHONE: (732) 560-9700

CERTIFICATE OF AUTHORIZATION NO. 24GA28032700

ALL DIMENSIONS MUST BE VERIFIED BY THE CONTRACTOR. NOTIFY PAULUS, SOKOLOWSKI AND SARTOR, LLC OF ANY CONFLICTS, ERRORS, AMBIGUITIES OR DISCREPANCIES IN THE CONTRACT DRAWINGS OR SPECIFICATIONS BEFORE PROCEEDING WITH CONSTRUCTION.

ALL DIMENSIONS SHALL BE AS NOTED IN NUMBERS ON THE CONTRACT DRAWINGS. DO NOT SCALE THE DRAWINGS TO DETERMINE DIMENSIONS.

THESE CONTRACT DRAWINGS CONTAIN DATA INTENDED SPECIFICALLY FOR THE NOTED PROJECT AND CLIENT. THEY ARE NOT INTENDED FOR USE ON EXTENSIONS OF THIS PROJECT OR FOR REUSE ON ANY OTHER PROJECT.

THE COPYING AND/OR MODIFICATION OF THIS DOCUMENT OR ANY PORTION THEREOF WITHOUT THE WRITTEN PERMISSION OF PAULUS, SOKOLOWSKI AND SARTOR, LLC. IS PROHIBITED.

UNLESS THESE DRAWINGS ARE SPECIFICALLY DESIGNATED AS "CONSTRUCTION ISSUE", THESE DRAWINGS SHALL NOT BE USED FOR CONSTRUCTION OR IMPROVEMENTS DEPICTED HEREIN. CONTRACTORS SHALL NOTIFY THE DESIGN ENGINEER TO OBTAIN CONSTRUCTION DOCUMENTS.

COPYRIGHT 2019 PAULUS, SOKOLOWSKI AND SARTOR, LLC – ALL RIGHTS RESERVED.



1/7/2019

CLIENT

PROJECT

NEW JERSEY
CENTER OF EXCELLENCE

1041 N.J.S.H. ROUTE 202/206
BLOCK 483, LOTS 17, 18 & 19

TOWNSHIP OF BRIDGEWATER
SOMERSET COUNTY, NEW JERSEY 08807

SHEET TITLE

PROFILES
(SHEET 3 OF 18)

JOB NO.:	00488.0041
DATE:	05/09/2018
DRAWN:	TB/CY
CHECK:	CH/LAD
SCALE:	Horizontal: 1" = 50' Vertical: 1" = 5'

SHEET NO. 16.04 OF 75

C-16.04

File Name: P:\00488\004 ENGSC-Civil\Design\C-16.04 PROFILES.dwg 12-13-18 LAST EDIT: 01/07/2019 - 02:11:51 PM LOGIN: tbenigno@

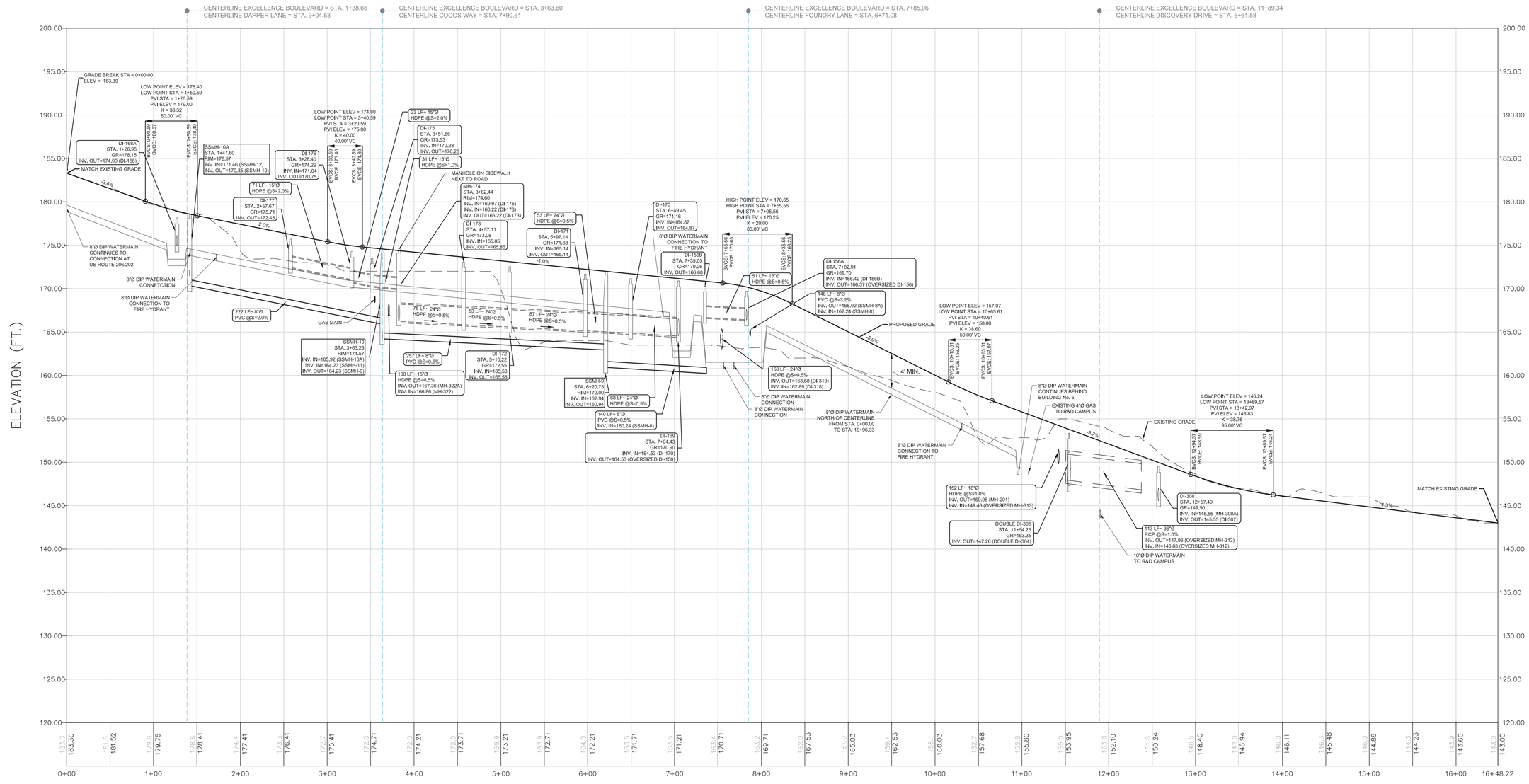

PROFILE OF ALIGNMENT - EXCELLENCE BOULEVARD AND DISCOVERY DRIVE NORTH OF CENTERLINE

VERTICAL SCALE

5 0 2.5 5 10 20

(IN FEET)
1 inch = 5 ft.

HORIZONTAL SCALE

50 0 25 50 100 200

(IN FEET)
1 inch = 50 ft.

REV. / ISSUE	DATE	DESCRIPTION
1	11/12/18	REVISED PER BOARD COMMENTS
2	1/07/19	REVISED PER BOARD COMMENTS

CONSULTANT

ORIENTATION / KEY PLAN

PAULUS, SOKOLOWSKI AND SARTOR, LLC

67A MOUNTAIN BLVD EXT.
P.O. BOX 4039
WARREN, NEW JERSEY 07059
PHONE: (732) 560-9700

CERTIFICATE OF AUTHORIZATION NO. 24GA28032700

ALL DIMENSIONS MUST BE VERIFIED BY THE CONTRACTOR. NOTIFY PAULUS, SOKOLOWSKI AND SARTOR, LLC OF ANY DISCREPANCIES OR OMISSIONS BETWEEN THE CONTRACT DRAWINGS OR SPECIFICATIONS BEFORE PROCEEDING WITH CONSTRUCTION.

ALL DIMENSIONS SHALL BE AS NOTED IN WORDS OR NUMBERS ON THE CONTRACT DRAWINGS. DO NOT SCALE THE DRAWINGS TO OBTAIN ANY DIMENSIONS.

THESE CONTRACT DRAWINGS CONTAIN DATA INTENDED SPECIFICALLY FOR THE NOTED PROJECT AND CLIENT. THEY ARE NOT INTENDED FOR USE ON EXTENSIONS OF THIS PROJECT OR FOR REUSE ON ANY OTHER PROJECT.

THE COPYING AND/OR MODIFICATION OF THIS DOCUMENT OR ANY PORTION THEREOF WITHOUT THE WRITTEN PERMISSION OF PAULUS, SOKOLOWSKI AND SARTOR, LLC. IS PROHIBITED.

UNLESS THESE DRAWINGS ARE SPECIFICALLY DESIGNATED AS "CONSTRUCTION ISSUE", THESE DRAWINGS SHALL NOT BE USED FOR CONSTRUCTION OR IMPROVEMENTS DEPICTED HEREIN. CONTRACTORS SHALL NOTIFY THE DESIGN ENGINEER TO OBTAIN CONSTRUCTION DOCUMENTS.

COPYRIGHT 2019 PAULUS, SOKOLOWSKI AND SARTOR, LLC. – ALL RIGHTS RESERVED.



1/7/2019

CLIENT

PROJECT

NEW JERSEY
CENTER OF EXCELLENCE

1041 N.J.S.H. ROUTE 202/206
BLOCK 483, LOTS 17, 18 & 19

TOWNSHIP OF BRIDGEWATER
SOMERSET COUNTY, NEW JERSEY 08807

SHEET TITLE

PROFILES
(SHEET 4 OF 18)

JOB NO.:	00488.0041
DATE:	05/09/2018
DRAWN:	TB/CY
CHECK:	CH/LAD
SCALE:	Horizontal: 1" = 50' Vertical: 1" = 5'

SHEET NO. 16.05 OF 75

C-16.05

FILE NAME: P:\00488\0041\DWG\xC-Civil\Prelim\C-13-14 PROFILES.dwg LOAN, LAST EDIT: 11/07/2019, 08:13:58 PM, LOGIN: tbennington

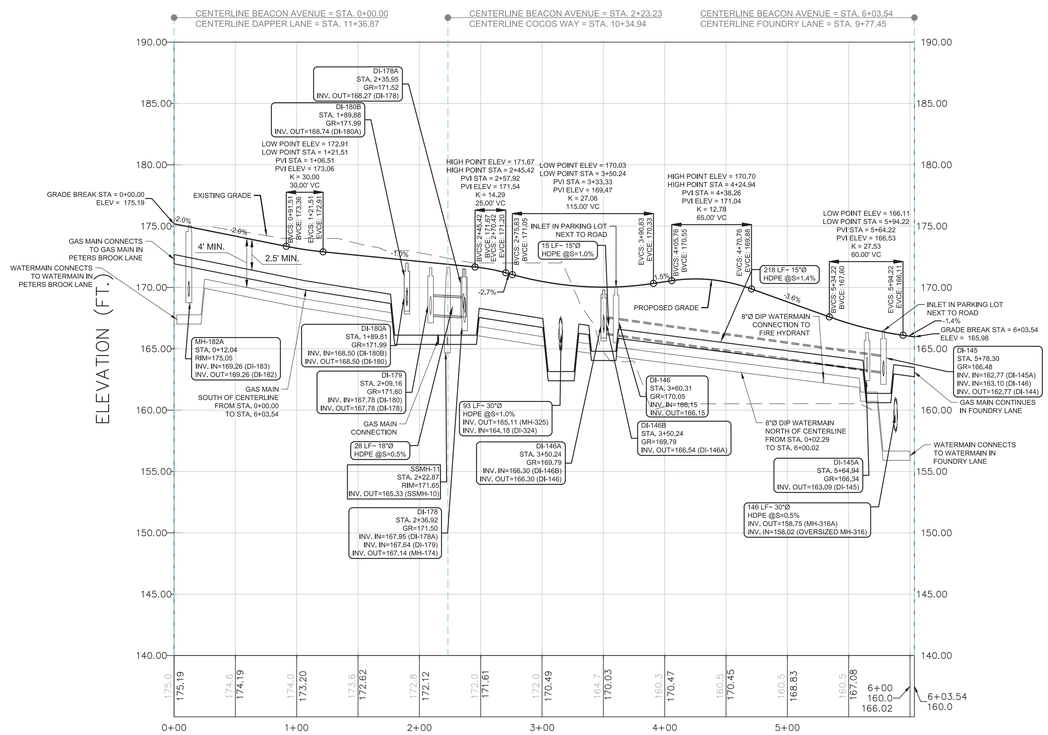

PROFILE OF ALIGNMENT - BEACON AVENUE

VERTICAL SCALE

5 0 2.5 5 10 20

(IN FEET)
1 inch = 5 ft.

HORIZONTAL SCALE

50 0 25 50 100 200

(IN FEET)
1 inch = 50 ft.

REV. / ISSUE	DATE	DESCRIPTION
1	11/12/18	REVISED PER BOARD COMMENTS
2	1/07/19	REVISED PER BOARD COMMENTS

CONSULTANT

ORIENTATION / KEY PLAN

PAULUS, SOKOLOWSKI AND SARTOR, LLC

67A MOUNTAIN BLVD EXT.
P.O. BOX 4039
WARREN, NEW JERSEY 07059
PHONE: (732) 560-9700

CERTIFICATE OF AUTHORIZATION NO. 24GA28032700

ALL DIMENSIONS MUST BE VERIFIED BY THE CONTRACTOR. NOTIFY PAULUS, SOKOLOWSKI AND SARTOR, LLC OF ANY CONFLICTS, ERRORS, AMBIGUITIES OR DISCREPANCIES IN THE CONTRACT DRAWINGS OR SPECIFICATIONS BEFORE PROCEEDING WITH CONSTRUCTION.

ALL DIMENSIONS SHALL BE AS NOTED IN WORDS OR NUMBERS ON THE CONTRACT DRAWINGS. DO NOT SCALE THE DRAWINGS TO OBTAIN DIMENSIONS.

THESE CONTRACT DRAWINGS CONTAIN DATA INTENDED SPECIFICALLY FOR THE NOTED PROJECT ONLY. THEY ARE NOT TO BE USED OR REUSED FOR USE ON EXTENSIONS OF THIS PROJECT OR FOR REUSE ON ANY OTHER PROJECT.

THE COPYING AND/OR MODIFICATION OF THIS DOCUMENT OR ANY PORTION THEREOF WITHOUT THE WRITTEN PERMISSION OF PAULUS, SOKOLOWSKI AND SARTOR, LLC. IS PROHIBITED.

UNLESS THESE DRAWINGS ARE SPECIFICALLY DESIGNATED AS "CONSTRUCTION ISSUE", THESE DRAWINGS SHALL NOT BE USED FOR CONSTRUCTION OR IMPROVEMENTS DEPICTED HEREIN. CONTRACTORS SHALL NOTIFY THE DESIGN ENGINEER TO OBTAIN CONSTRUCTION DOCUMENTS.

COPYRIGHT 2019 PAULUS, SOKOLOWSKI AND SARTOR, LLC – ALL RIGHTS RESERVED.



1/7/2019

CLIENT

PROJECT

NEW JERSEY
CENTER OF EXCELLENCE

1041 N.J.S.H. ROUTE 202/206
BLOCK 483, LOTS 17, 18 & 19

TOWNSHIP OF BRIDGEWATER
SOMERSET COUNTY, NEW JERSEY 08807

SHEET TITLE

PROFILES
(SHEET 5 OF 18)

JOB NO.:	00488.0041
DATE:	05/09/2018
DRAWN:	TB/CY
CHECK:	CH/LAD
SCALE:	Horizontal: 1" = 50' Vertical: 1" = 5'

SHEET NO. 16.06 OF 75

C-16.06

FILE NAME: P:\00488\041\05\DGC-Civil\Design\C-16.06_ADS.DGT 01/07/2019 - 03:16:39 PM USER: tbennett

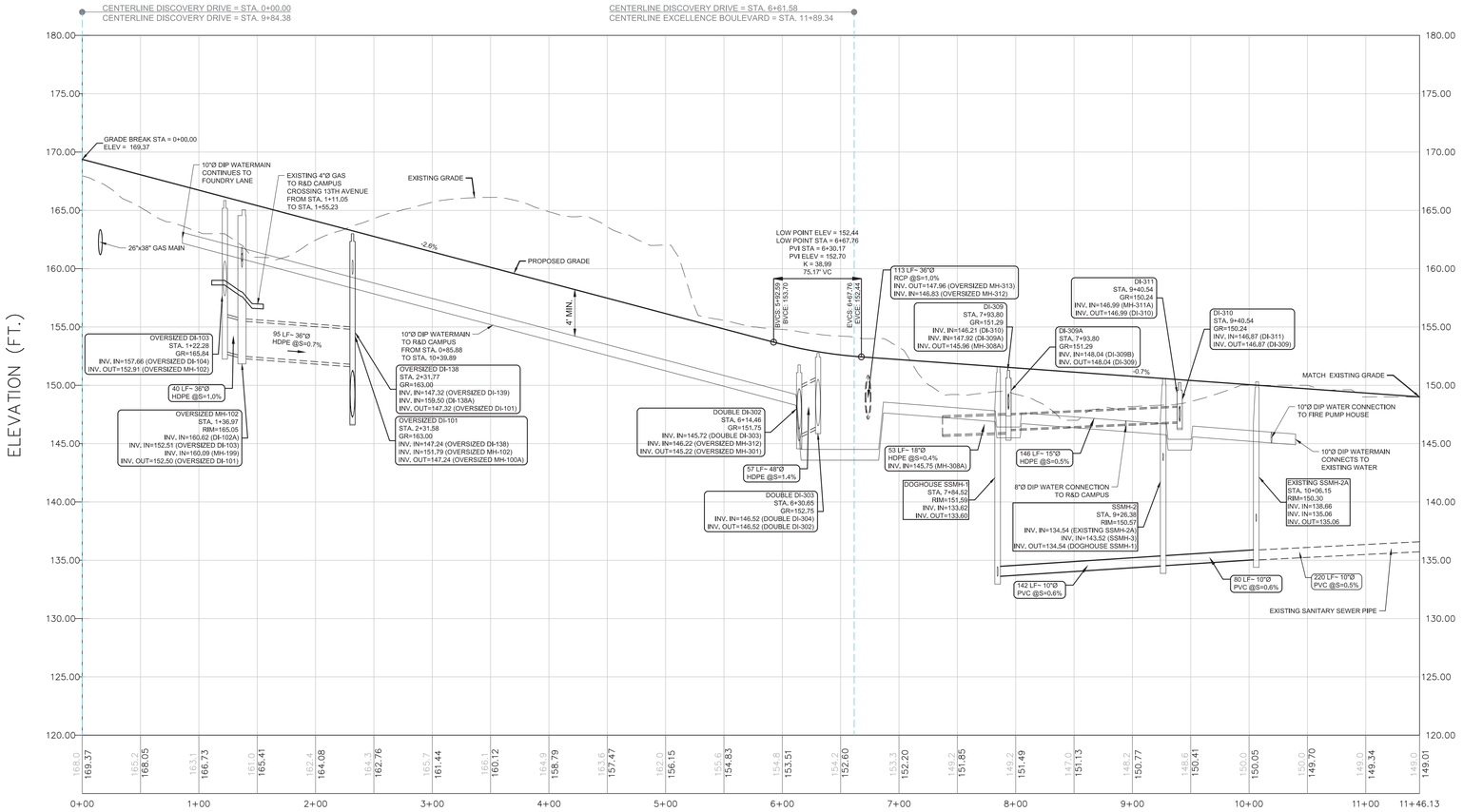

PROFILE OF ALIGNMENT - DISCOVERY DRIVE AND 13TH AVENUE

VERTICAL SCALE

5 0 2.5 5 10 20

(IN FEET)
1 inch = 5 ft.

HORIZONTAL SCALE

50 0 25 50 100 200

(IN FEET)
1 inch = 50 ft.

REV. / ISSUE	DATE	DESCRIPTION
1	11/12/18	REVISED PER BOARD COMMENTS
2	1/07/19	REVISED PER BOARD COMMENTS

CONSULTANT

ORIENTATION / KEY PLAN

PAULUS, SOKOLOWSKI AND SARTOR, LLC

67A MOUNTAIN BLVD EXT.
P.O. BOX 4039
WARREN, NEW JERSEY 07059
PHONE: (732) 560-9700

CERTIFICATE OF AUTHORIZATION NO. 24GA28032700

ALL DIMENSIONS MUST BE VERIFIED BY THE CONTRACTOR. NOTIFY PAULUS, SOKOLOWSKI AND SARTOR, LLC OF ANY DISCREPANCIES OR OMISSIONS BETWEEN THE DRAWINGS AND THE CONTRACT DRAWINGS OR SPECIFICATIONS BEFORE PROCEEDING WITH CONSTRUCTION.

ALL DIMENSIONS SHALL BE AS NOTED IN WORDS OR NUMBERS ON THE CONTRACT DRAWINGS. DO NOT SCALE THE DRAWINGS TO OBTAIN ANY DIMENSIONS.

THESE CONTRACT DRAWINGS CONTAIN DATA INTENDED SPECIFICALLY FOR THE NOTED PROJECT AND CLIENT. THEY ARE NOT INTENDED FOR USE ON EXTENSIONS OF THIS PROJECT OR FOR REUSE ON ANY OTHER PROJECT.

THE COPYING AND/OR MODIFICATION OF THIS DOCUMENT OR ANY PORTION THEREOF WITHOUT THE WRITTEN PERMISSION OF PAULUS, SOKOLOWSKI AND SARTOR, LLC. IS PROHIBITED.

UNLESS THESE DRAWINGS ARE SPECIFICALLY DESIGNATED AS "CONSTRUCTION ISSUE", THESE DRAWINGS SHALL NOT BE USED FOR CONSTRUCTION OR IMPROVEMENTS DEPICTED HEREIN. CONTRACTORS SHALL NOTIFY THE DESIGN ENGINEER TO OBTAIN CONSTRUCTION DOCUMENTS.

COPYRIGHT 2019 PAULUS, SOKOLOWSKI AND SARTOR, LLC – ALL RIGHTS RESERVED.



1/7/2019

CLIENT

PROJECT

NEW JERSEY
CENTER OF EXCELLENCE

1041 N.J.S.H. ROUTE 202/206
BLOCK 483, LOTS 17, 18 & 19

TOWNSHIP OF BRIDGEWATER
SOMERSET COUNTY, NEW JERSEY 08807

SHEET TITLE

PROFILES
(SHEET 6 OF 18)

JOB NO.:	00488.0041
DATE:	05/09/2018
DRAWN:	TB/CY
CHECK:	CH/LAD
SCALE:	Horizontal: 1" = 50' Vertical: 1" = 5'

SHEET NO. 16.07 OF 75

C-16.07

FILE NAME: P:\00488\0041\DWG\Civil\Printing\C-13-18 PROFILES.dwg LOG BY: LAST EDIT: 01/07/2019 - 02:11:51 PM LOGIN: tbennington

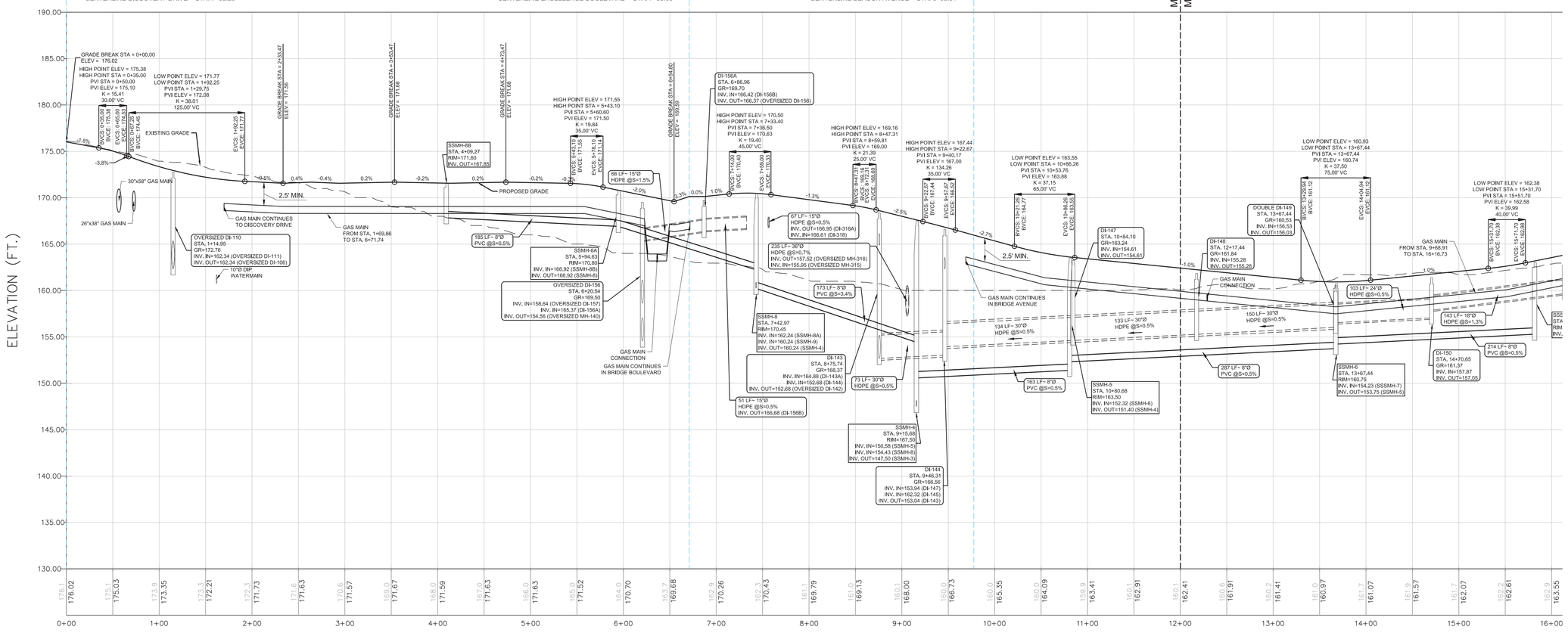

PROFILE OF ALIGNMENT - FOUNDRY LANE
WEST OF CENTERLINE

VERTICAL SCALE

5 0 2.5 5 10 20

(IN FEET)
1 inch = 5 ft.

HORIZONTAL SCALE

50 0 25 50 100 200

(IN FEET)
1 inch = 50 ft.

REV. / ISSUE	DATE	DESCRIPTION
1	11/12/18	REVISED PER BOARD COMMENTS
2	1/07/19	REVISED PER BOARD COMMENTS

CONSULTANT

ORIENTATION / KEY PLAN

PAULUS, SOKOLOWSKI AND SARTOR, LLC
67A MOUNTAIN BLVD EXT.
P.O. BOX 4039
WARREN, NEW JERSEY 07059
PHONE: (732) 560-9700
CERTIFICATE OF AUTHORIZATION NO. 24GA28032700

ALL DIMENSIONS MUST BE VERIFIED BY THE CONTRACTOR. NOTIFY PAULUS, SOKOLOWSKI AND SARTOR, LLC OF ANY DISCREPANCIES BETWEEN THE CONTRACT DRAWINGS AND THE CONTRACT DRAWINGS OR SPECIFICATIONS BEFORE PROCEEDING WITH CONSTRUCTION.

ALL DIMENSIONS SHALL BE AS NOTED IN WORDS OR NUMBERS ON THE CONTRACT DRAWINGS. DO NOT SCALE THE DRAWINGS TO DETERMINE DIMENSIONS.

THESE CONTRACT DRAWINGS CONTAIN DATA INTENDED SPECIFICALLY FOR THE NOTED PROJECT AND CLIENT. THEY ARE NOT INTENDED FOR USE ON EXTENSIONS OF THIS PROJECT OR FOR REUSE ON ANY OTHER PROJECT.

THE COPYING AND/OR MODIFICATION OF THIS DOCUMENT OR ANY PORTION THEREOF WITHOUT THE WRITTEN PERMISSION OF PAULUS, SOKOLOWSKI AND SARTOR, LLC. IS PROHIBITED.

UNLESS THESE DRAWINGS ARE SPECIFICALLY DESIGNATED AS "CONSTRUCTION ISSUE", THESE DRAWINGS SHALL NOT BE USED FOR CONSTRUCTION OR IMPLEMENTATION PURPOSES. HEREIN, CONTRACTORS SHALL NOTIFY THE DESIGN ENGINEER TO OBTAIN CONSTRUCTION DOCUMENTS.

COPYRIGHT 2019 PAULUS, SOKOLOWSKI AND SARTOR, LLC – ALL RIGHTS RESERVED.



1/7/2019

CLIENT

PROJECT

NEW JERSEY
CENTER OF EXCELLENCE

1041 N.J.S.H. ROUTE 202/206
BLOCK 483, LOTS 17, 18 & 19

TOWNSHIP OF BRIDGEWATER
SOMERSET COUNTY, NEW JERSEY 08807

SHEET TITLE

PROFILES
(SHEET 7 OF 18)

JOB NO.:	00488.0041
DATE:	05/09/2018
DRAWN:	TB/CY
CHECK:	CH/LAD
SCALE:	Horizontal: 1" = 50' Vertical: 1" = 5'

SHEET NO. 16.08 OF 75

C-16.08

FILENAME: P:\00488\0041\Drf\Civil_Cnst\Plotting\C-13-14 PROFILES.dwg LC-16.08 LAST EDIT: 01/07/2019 - 02:12:42 PM LOGIN: tbenning

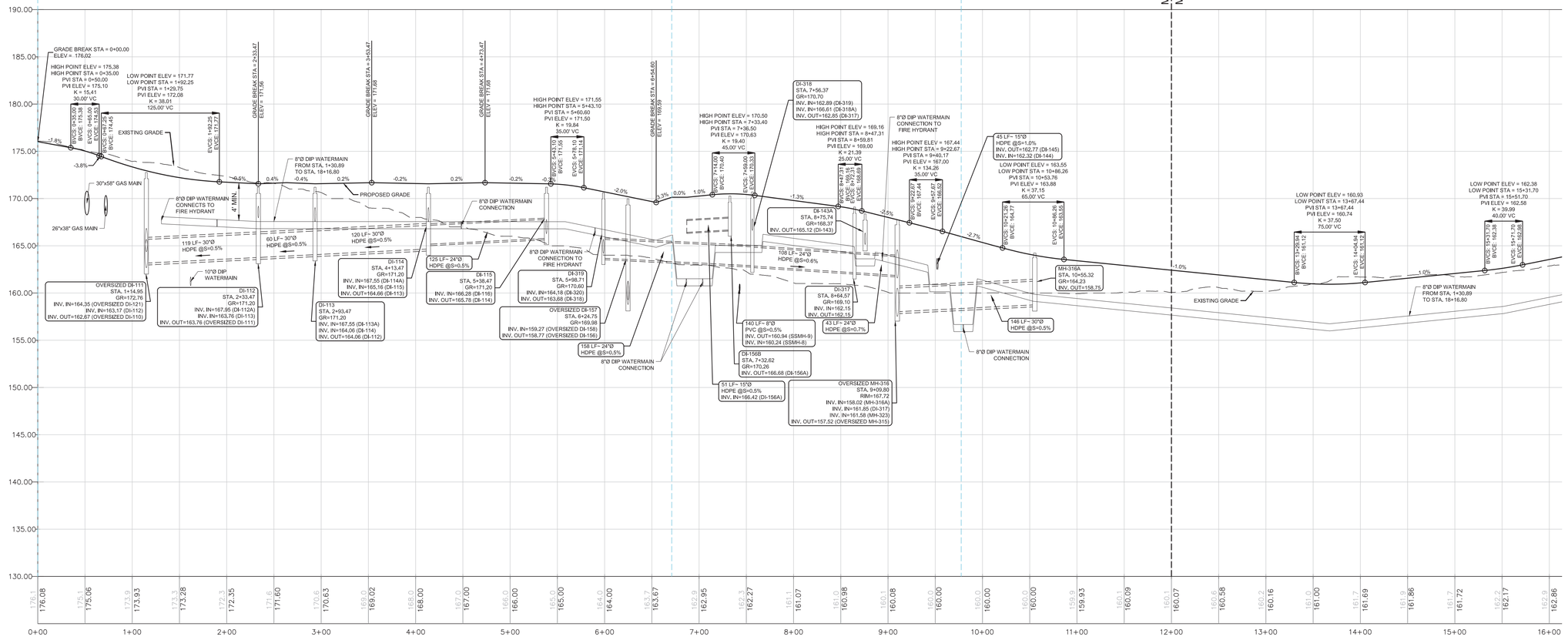

PROFILE OF ALIGNMENT - FOUNDRY LANE
EAST OF CENTERLINE

VERTICAL SCALE

5 0 2.5 5 10 20

(IN FEET)
1 inch = 5 ft.

HORIZONTAL SCALE

50 0 25 50 100 200

(IN FEET)
1 inch = 50 ft.

REV. / ISSUE	DATE	DESCRIPTION
1	11/12/18	REVISED PER BOARD COMMENTS
2	1/07/19	REVISED PER BOARD COMMENTS

CONSULTANT

ORIENTATION / KEY PLAN

PAULUS, SOKOLOWSKI AND SARTOR, LLC

67A MOUNTAIN BLVD EXT.
P.O. BOX 4039
WARREN, NEW JERSEY 07059
PHONE: (732) 560-9700

CERTIFICATE OF AUTHORIZATION NO. 24GA28032700

ALL DIMENSIONS MUST BE VERIFIED BY THE CONTRACTOR, NOTIFY PAULUS, SOKOLOWSKI AND SARTOR, LLC OF ANY DISCREPANCIES BETWEEN THE DRAWINGS AND THE CONTRACT DRAWINGS OR SPECIFICATIONS BEFORE PROCEEDING WITH CONSTRUCTION.

ALL DIMENSIONS SHALL BE AS NOTED IN WORDS OR NUMBERS ON THE CONTRACT DRAWINGS. DO NOT SCALE THE DRAWINGS TO DETERMINE DIMENSIONS.

THESE CONTRACT DRAWINGS CONTAIN DATA INTENDED SPECIFICALLY FOR THE NOTED PROJECT AND CLIENT, THEY ARE NOT INTENDED FOR USE ON EXTENSIONS OF THIS PROJECT OR FOR REUSE ON ANY OTHER PROJECT.

THE COPYING AND/OR MODIFICATION OF THIS DOCUMENT OR ANY PORTION THEREOF WITHOUT THE WRITTEN PERMISSION OF PAULUS, SOKOLOWSKI AND SARTOR, LLC. IS PROHIBITED.

UNLESS THESE DRAWINGS ARE SPECIFICALLY DESIGNATED AS "CONSTRUCTION ISSUE", THESE DRAWINGS SHALL NOT BE USED FOR CONSTRUCTION OR IMPROVEMENTS DEPICTED HEREIN. CONTRACTORS SHALL NOTIFY THE DESIGN ENGINEER TO OBTAIN CONSTRUCTION DOCUMENTS.

COPYRIGHT 2019 PAULUS, SOKOLOWSKI AND SARTOR, LLC – ALL RIGHTS RESERVED.



1/7/2019

CLIENT

PROJECT

NEW JERSEY
CENTER OF EXCELLENCE

1041 N.J.S.H. ROUTE 202/206
BLOCK 483, LOTS 17, 18 & 19

TOWNSHIP OF BRIDGEWATER
SOMERSET COUNTY, NEW JERSEY 08807

SHEET TITLE

PROFILES
(SHEET 8 OF 18)

JOB NO.:	00488.0041
DATE:	05/09/2018
DRAWN:	TB/CY
CHECK:	CH/LAD
SCALE:	Horizontal: 1" = 50' Vertical: 1" = 5'

SHEET NO. 16.09 OF 75

C-16.09

FILENAME: P:\00488\041\DWG\C-Civil\Prelim\C-16.09_EASTERY 01/07/2019 02:31:17 PM LOGIN: tbenning@

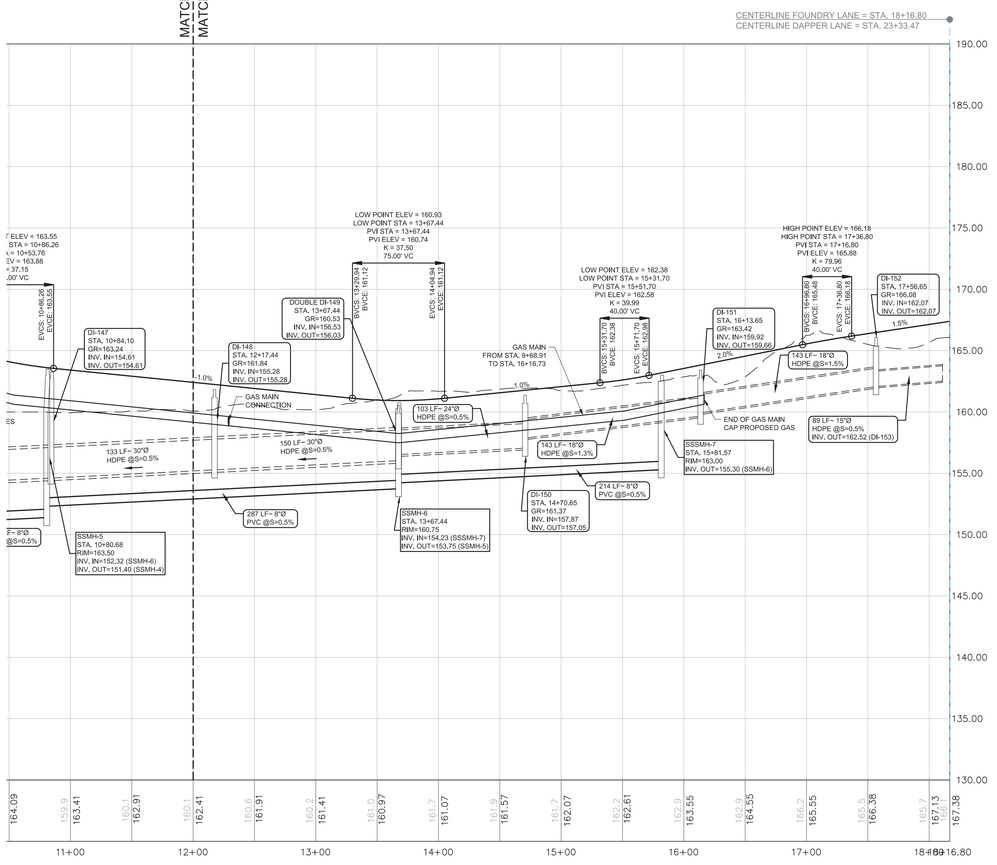

PROFILE OF ALIGNMENT - FOUNDRY LANE
WEST OF CENTERLINE

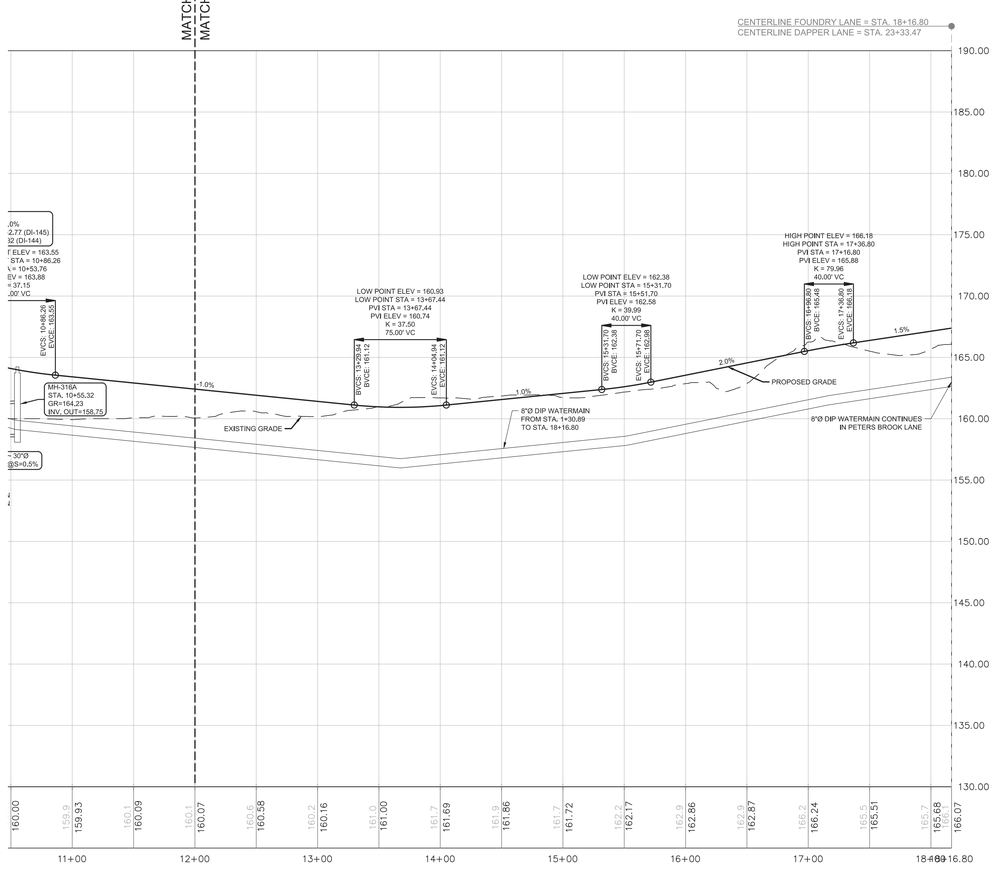

PROFILE OF ALIGNMENT - FOUNDRY LANE
EAST OF CENTERLINE

VERTICAL SCALE

5 0 2.5 5 10 20

(IN FEET)
1 inch = 5 ft.

HORIZONTAL SCALE

50 0 25 50 100 200

(IN FEET)
1 inch = 50 ft.

REV. / ISSUE	DATE	DESCRIPTION

CONSULTANT

ORIENTATION / KEY PLAN

PAULUS, SOKOLOWSKI AND SARTOR, LLC

67A MOUNTAIN BLVD EXT.
P.O. BOX 4039
WARREN, NEW JERSEY 07059
PHONE: (732) 560-9700

CERTIFICATE OF AUTHORIZATION NO. 24GA28032700

ALL DIMENSIONS MUST BE VERIFIED BY THE CONTRACTOR. NOTIFY PAULUS, SOKOLOWSKI AND SARTOR, LLC OF ANY DISCREPANCIES OR OMISSIONS BEFORE PROCEEDING WITH THE CONTRACT DRAWINGS OR SPECIFICATIONS BEFORE PROCEEDING WITH CONSTRUCTION.

ALL DIMENSIONS SHALL BE AS NOTED IN WORDS OR NUMBERS ON THE CONTRACT DRAWINGS. DO NOT SCALE THE DRAWINGS TO DETERMINE DIMENSIONS.

THESE CONTRACT DRAWINGS CONTAIN DATA INTENDED SPECIFICALLY FOR THE NOTED PROJECT AND CLIENT. THEY ARE NOT INTENDED FOR USE ON EXTENSIONS OF THIS PROJECT OR FOR REUSE ON ANY OTHER PROJECT.

THE COPYING AND/OR MODIFICATION OF THIS DOCUMENT OR ANY PORTION THEREOF WITHOUT THE WRITTEN PERMISSION OF PAULUS, SOKOLOWSKI AND SARTOR, LLC IS PROHIBITED.

UNLESS THESE DRAWINGS ARE SPECIFICALLY DESIGNATED AS "CONSTRUCTION ISSUE", THESE DRAWINGS SHALL NOT BE USED FOR CONSTRUCTION OR IMPLEMENTATION PURPOSES. HEREIN, CONTRACTORS SHALL NOTIFY THE DESIGN ENGINEER TO OBTAIN CONSTRUCTION DOCUMENTS.

COPYRIGHT 2019 PAULUS, SOKOLOWSKI AND SARTOR, LLC – ALL RIGHTS RESERVED.



1/7/2019

CLIENT

PROJECT

NEW JERSEY
CENTER OF EXCELLENCE

1041 N.J.S.H. ROUTE 202/206
BLOCK 483, LOTS 17, 18 & 19

TOWNSHIP OF BRIDGEWATER
SOMERSET COUNTY, NEW JERSEY 08807

SHEET TITLE

PROFILES
(SHEET 9 OF 18)

JOB NO.:	00488.0041
DATE:	01/07/2018
DRAWN:	TB/CY
CHECK:	CH/LAD
SCALE:	Horizontal: 1" = 50' Vertical: 1" = 5'

SHEET NO. 16.10 OF 75

C-16.10

FILENAME: P:\00488\0041\Drfting\Civil\Plotting\C-16.10 PROFILES.dwg LC-16.10 LAST EDIT: 01/07/2019 - 02:13:41 PM LOGIN: tbenegas

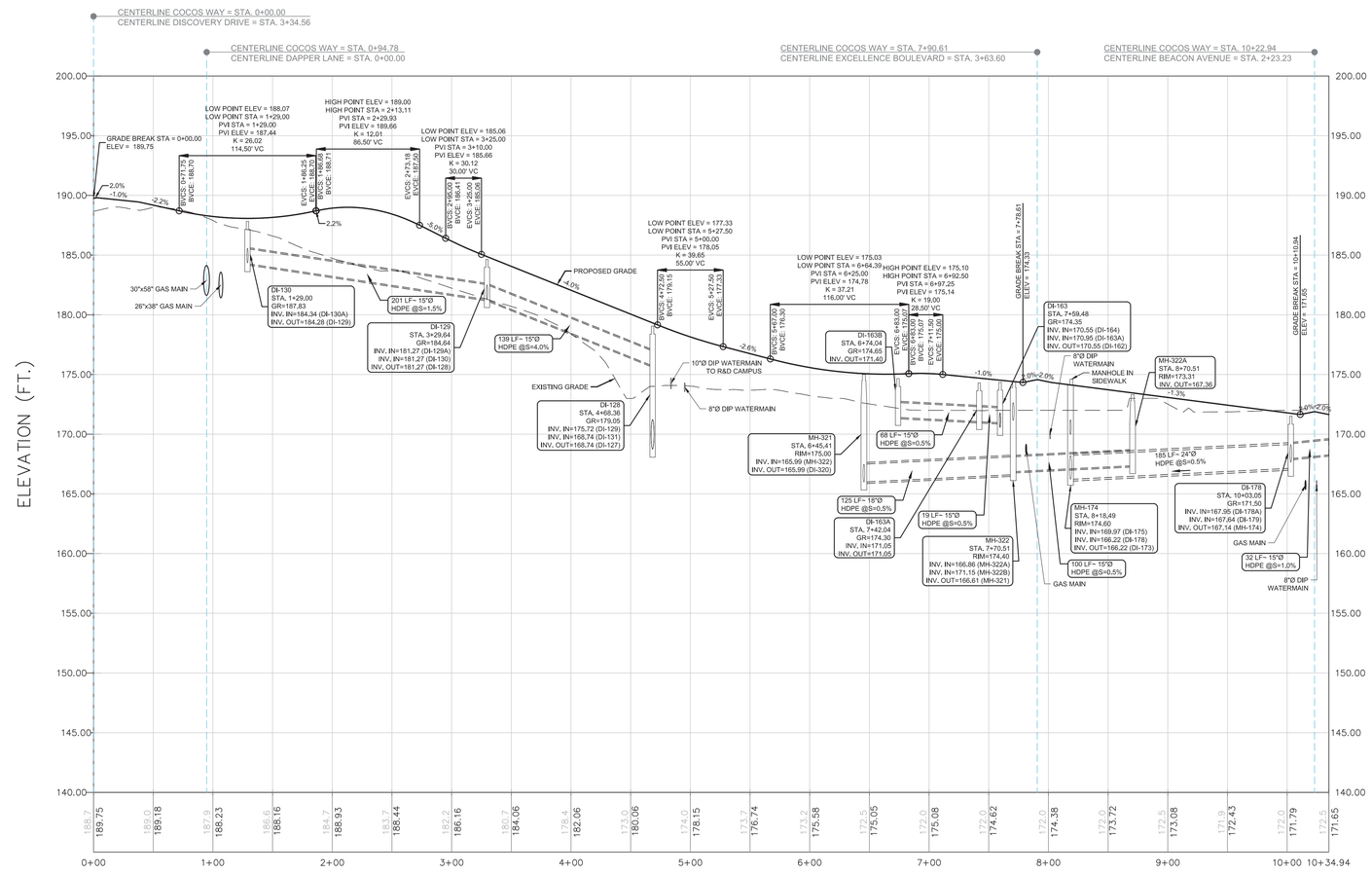

PROFILE OF ALIGNMENT - COCOS WAY SOUTH/WEST OF CENTERLINE

VERTICAL SCALE

5 0 2.5 5 10 20

(IN FEET)
1 inch = 5 ft.

HORIZONTAL SCALE

50 0 25 50 100 200

(IN FEET)
1 inch = 50 ft.

REV. / ISSUE	DATE	DESCRIPTION
1	11/12/18	REVISED PER BOARD COMMENTS
2	1/07/19	REVISED PER BOARD COMMENTS

CONSULTANT

ORIENTATION / KEY PLAN

PAULUS, SOKOLOWSKI AND SARTOR, LLC
67A MOUNTAIN BLVD EXT.
P.O. BOX 4039
WARREN, NEW JERSEY 07059
PHONE: (732) 560-9700
CERTIFICATE OF AUTHORIZATION NO. 24GA28032700

ALL DIMENSIONS MUST BE VERIFIED BY THE CONTRACTOR. NOTIFY PAULUS, SOKOLOWSKI AND SARTOR, LLC OF ANY CONFLICTS, ERRORS, AMBIGUITIES OR DISCREPANCIES IN THE CONTRACT DRAWINGS OR SPECIFICATIONS BEFORE PROCEEDING WITH CONSTRUCTION.

ALL DIMENSIONS SHALL BE AS NOTED IN WORDS OR NUMBERS, ON THE CONTRACT DRAWINGS. DO NOT SCALE THE DRAWINGS TO DETERMINE DIMENSIONS.

THESE CONTRACT DRAWINGS CONTAIN DATA INTENDED SPECIFICALLY FOR THE NOTED PROJECT AND CLIENT. THEY ARE NOT INTENDED FOR USE ON EXTENSIONS OF THIS PROJECT OR FOR REUSE ON ANY OTHER PROJECT.

THE COPYING AND/OR MODIFICATION OF THIS DOCUMENT OR ANY PORTION THEREOF WITHOUT THE WRITTEN PERMISSION OF PAULUS, SOKOLOWSKI AND SARTOR, LLC IS PROHIBITED.

UNLESS THESE DRAWINGS ARE SPECIFICALLY DESIGNATED AS "CONSTRUCTION ISSUE", THESE DRAWINGS SHALL NOT BE USED FOR CONSTRUCTION OR IMPROVEMENTS DEPICTED HEREIN. CONTRACTORS SHALL NOTIFY THE DESIGN ENGINEER TO OBTAIN CONSTRUCTION DOCUMENTS.

COPYRIGHT 2019 PAULUS, SOKOLOWSKI AND SARTOR, LLC – ALL RIGHTS RESERVED.

STATE OF NEW JERSEY
LADD
37067
PROFESSIONAL ENGINEER
LICENSED

1/7/2019

CLIENT

PROJECT

NEW JERSEY
CENTER OF EXCELLENCE

1041 N.J.S.H. ROUTE 202/206
BLOCK 483, LOTS 17, 18 & 19

TOWNSHIP OF BRIDGEWATER
SOMERSET COUNTY, NEW JERSEY 08807

SHEET TITLE

PROFILES
(SHEET 10 OF 18)

JOB NO.:	00488.0041
DATE:	05/09/2018
DRAWN:	TB/CY
CHECK:	CH/LAD
SCALE:	Horizontal: 1" = 50' Vertical: 1" = 5'

SHEET NO. 16.11 OF 75

C-16.11

FILENAME: P:\00488\00041\DWG\C-CivilPlotting\C-16.11 PROFILES.dwg | C-16.11 | LAST EDIT: 01/07/2019 - 02:13:51 PM | LOGIN: flanninga@

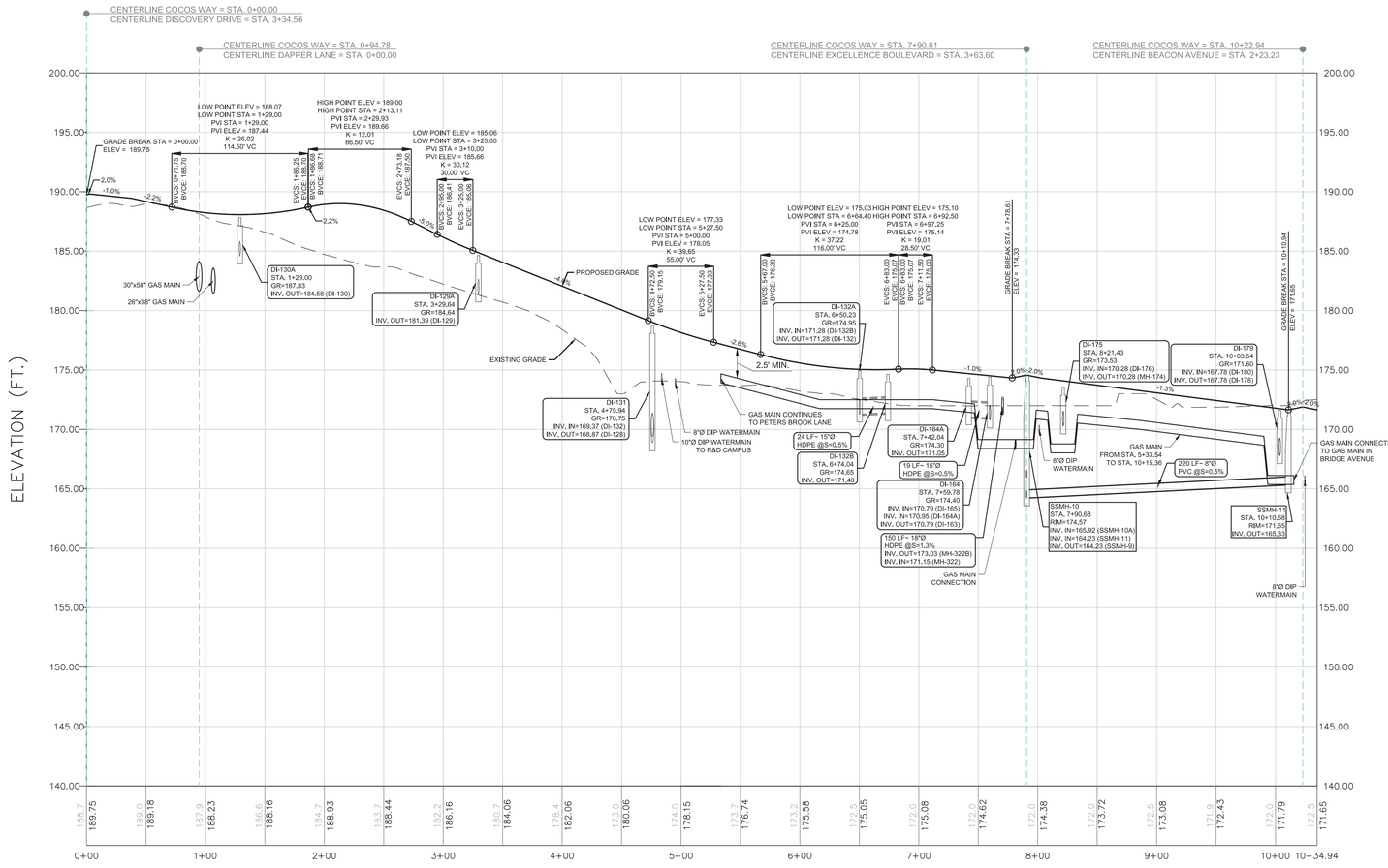

PROFILE OF ALIGNMENT - COCOS WAY NORTH/EAST OF CENTERLINE

VERTICAL SCALE

5 0 2.5 5 10 20

(IN FEET)
1 inch = 5 ft.

HORIZONTAL SCALE

50 0 25 50 100 200

(IN FEET)
1 inch = 50 ft.

REV. / ISSUE	DATE	DESCRIPTION
1	11/12/18	REVISED PER BOARD COMMENTS
2	1/07/19	REVISED PER BOARD COMMENTS

CONSULTANT

ORIENTATION / KEY PLAN

PAULUS, SOKOLOWSKI AND SARTOR, LLC

67A MOUNTAIN BLVD EXT.
P.O. BOX 4039
WARREN, NEW JERSEY 07059
PHONE: (732) 560-9700

CERTIFICATE OF AUTHORIZATION NO. 24GA28032700

ALL DIMENSIONS MUST BE VERIFIED BY THE CONTRACTOR. NOTIFY PAULUS, SOKOLOWSKI AND SARTOR, LLC OF ANY CONFLICTS, ERRORS, AMBIGUITIES OR DISCREPANCIES IN THE CONTRACT DRAWINGS OR SPECIFICATIONS BEFORE PROCEEDING WITH CONSTRUCTION.

ALL DIMENSIONS SHALL BE AS NOTED IN WORDS OR NUMBERS ON THE CONTRACT DRAWINGS. DO NOT SCALE THE DRAWINGS TO DETERMINE DIMENSIONS.

THESE CONTRACT DRAWINGS CONTAIN DATA INTENDED SPECIFICALLY FOR THE NOTED PROJECT. THEY ARE NOT TO BE USED OR REPRODUCED FOR USE ON EXTENSIONS OF THIS PROJECT OR FOR REUSE ON ANY OTHER PROJECT.

THE COPYING AND/OR MODIFICATION OF THIS DOCUMENT OR ANY PORTION THEREOF WITHOUT THE WRITTEN PERMISSION OF PAULUS, SOKOLOWSKI AND SARTOR, LLC IS PROHIBITED.

UNLESS THESE DRAWINGS ARE SPECIFICALLY DESIGNATED AS "CONSTRUCTION ISSUE", THEY ARE NOT TO BE USED FOR BIDDING OR CONSTRUCTION PURPOSES. IF USED FOR EITHER, CONTRACTORS SHALL NOTIFY THE DESIGN ENGINEER TO OBTAIN CONSTRUCTION DOCUMENTS.

COPYRIGHT 2019 PAULUS, SOKOLOWSKI AND SARTOR, LLC – ALL RIGHTS RESERVED.

LADD A. KUTYS
LICENSED PROFESSIONAL ENGINEER
37067
STATE OF NEW JERSEY

1/7/2019

CLIENT

PROJECT

NEW JERSEY
CENTER OF EXCELLENCE

1041 N.J.S.H. ROUTE 202/206
BLOCK 483, LOTS 17, 18 & 19

TOWNSHIP OF BRIDGEWATER
SOMERSET COUNTY, NEW JERSEY 08807

SHEET TITLE

PROFILES
(SHEET 11 OF 18)

JOB NO.:	00488.0041
DATE:	05/09/2018
DRAWN:	TB/CY
CHECK:	CH/LAD
SCALE:	Horizontal: 1" = 50' Vertical: 1" = 5'

SHEET NO. 16.12 OF 75

C-16.12

FILENAME: P:\00488\0041\Dwg\Cad\Presheet\C-16.12 PROFILES.dwg C-16.12 LAST EDIT: 01/07/2019 - 03:33:15 PM LOGIN: tbenvenga

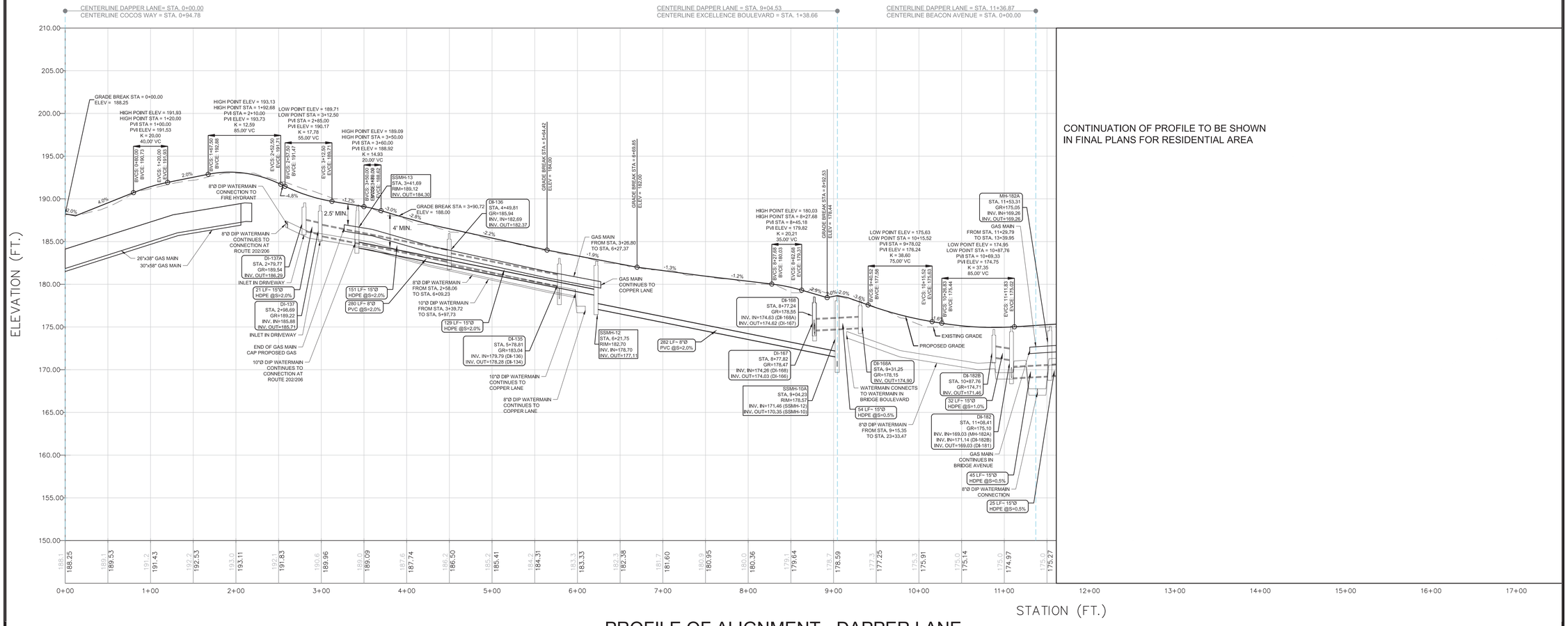

CONTINUATION OF PROFILE TO BE SHOWN IN FINAL PLANS FOR RESIDENTIAL AREA

PROFILE OF ALIGNMENT - DAPPER LANE

VERTICAL SCALE

5 0 2.5 5 10 20

(IN FEET)
1 inch = 5 ft.

HORIZONTAL SCALE

50 0 25 50 100 200

(IN FEET)
1 inch = 50 ft.

REV. / ISSUE	DATE	DESCRIPTION
1	11/12/18	REVISED PER BOARD COMMENTS
2	1/07/19	REVISED PER BOARD COMMENTS

CONSULTANT

ORIENTATION / KEY PLAN

PAULUS, SOKOLOWSKI AND SARTOR, LLC

67A MOUNTAIN BLVD EXT.
P.O. BOX 4039
WARREN, NEW JERSEY 07059
PHONE: (732) 560-9700

CERTIFICATE OF AUTHORIZATION NO. 24GA28032700

ALL DIMENSIONS MUST BE VERIFIED BY THE CONTRACTOR. NOTIFY PAULUS, SOKOLOWSKI AND SARTOR, LLC OF ANY CONFLICTS, ERRORS, AMBIGUITIES OR DISCREPANCIES IN THE CONTRACT DRAWINGS OR SPECIFICATIONS BEFORE PROCEEDING WITH CONSTRUCTION.

ALL DIMENSIONS SHALL BE AS NOTED IN WORDS OR NUMBERS ON THE CONTRACT DRAWINGS. DO NOT SCALE THE DRAWINGS TO DETERMINE DIMENSIONS.

THESE CONTRACT DRAWINGS CONTAIN DATA INTENDED SPECIFICALLY FOR THE NOTED PROJECT ONLY. THEY ARE NOT TO BE USED OR REVISED FOR USE ON EXTENSIONS OF THIS PROJECT OR FOR REUSE ON ANY OTHER PROJECT.

THE COPYING AND/OR MODIFICATION OF THIS DOCUMENT OR ANY PORTION THEREOF WITHOUT THE WRITTEN PERMISSION OF PAULUS, SOKOLOWSKI AND SARTOR, LLC IS PROHIBITED.

UNLESS THESE DRAWINGS ARE SPECIFICALLY DESIGNATED AS "CONSTRUCTION ISSUE", THEY ARE NOT TO BE USED FOR CONSTRUCTION PURPOSES. IF CONSTRUCTION IS PLANNED HEREIN, CONTRACTORS SHALL NOTIFY THE DESIGN ENGINEER TO OBTAIN CONSTRUCTION DOCUMENTS.

COPYRIGHT 2019 PAULUS, SOKOLOWSKI AND SARTOR, LLC – ALL RIGHTS RESERVED.



1/7/2019

CLIENT

PROJECT

NEW JERSEY
CENTER OF EXCELLENCE

1041 N.J.S.H. ROUTE 202/206
BLOCK 483, LOTS 17, 18 & 19

TOWNSHIP OF BRIDGEWATER
SOMERSET COUNTY, NEW JERSEY 08807

SHEET TITLE

PROFILES
(SHEET 12 OF 18)

JOB NO.:	00488.0041
DATE:	05/09/2018
DRAWN:	TB/CY
CHECK:	CH/LAD
SCALE:	Horizontal: 1" = 50' Vertical: 1" = 5'

SHEET NO. 16.13 OF 75

C-16.13

FILENAME: P:\00488\0041\Dwg\C-Civil\Design\C-13-14 PROFILES.dwg, C-16.13, LAST EDIT: 01/07/2019 - 02:31:11 PM, JOHN Benvenga

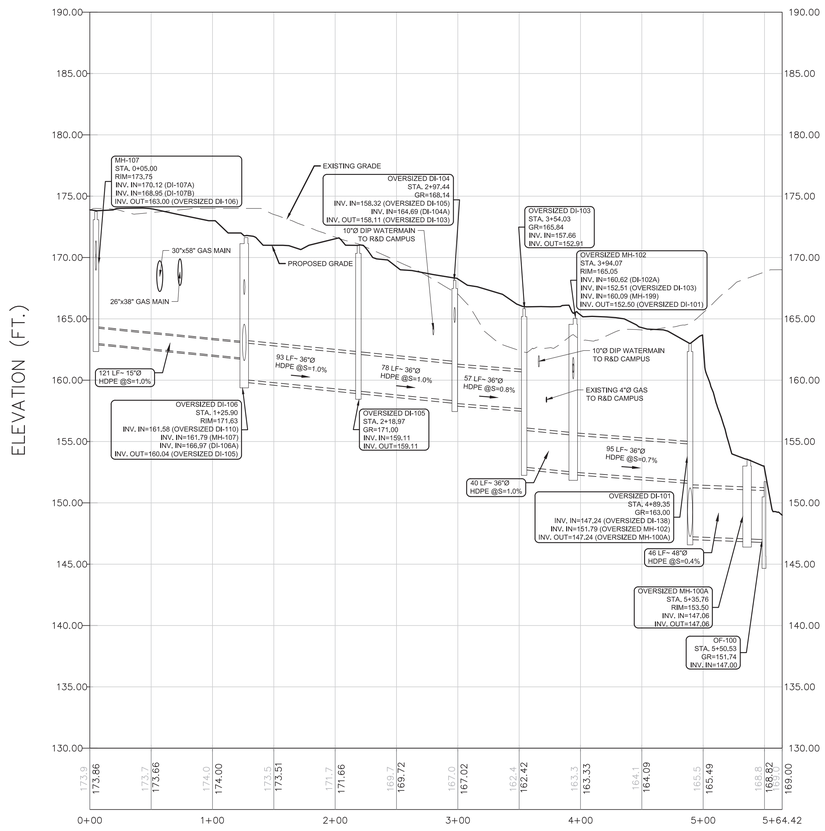

PROFILE OF ALIGNMENT - MH-107 TO OF-100

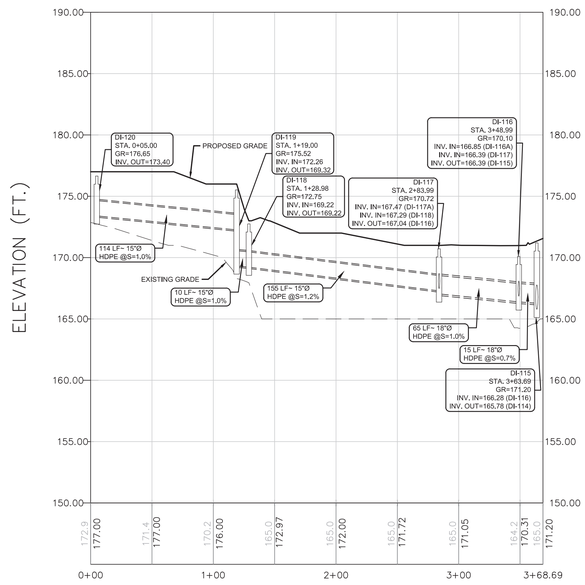

PROFILE OF ALIGNMENT - DI-120 TO DI-115

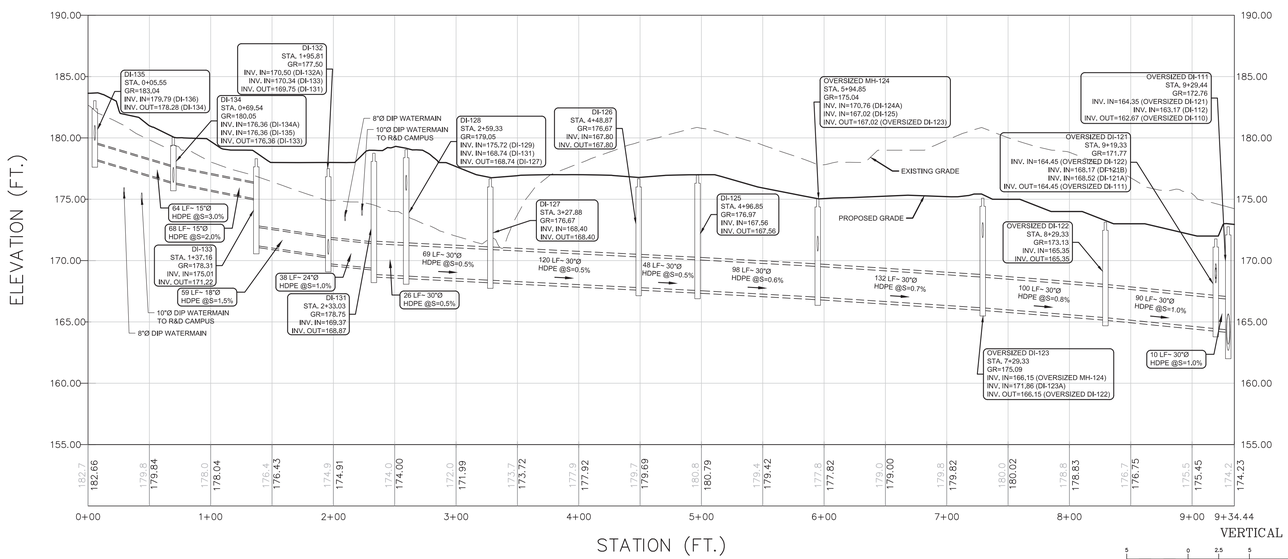

PROFILE OF ALIGNMENT - DI-135 TO DI-111

VERTICAL SCALE

5 0 2.5 5 10 20

(IN FEET)
1 inch = 5 ft.

HORIZONTAL SCALE

50 0 25 50 100 200

(IN FEET)
1 inch = 50 ft.

REV. / ISSUE	DATE	DESCRIPTION
1	11/12/18	REVISED PER BOARD COMMENTS
2	1/07/19	REVISED PER BOARD COMMENTS

CONSULTANT

ORIENTATION / KEY PLAN

PAULUS, SOKOLOWSKI AND SARTOR, LLC

67A MOUNTAIN BLVD EXT.
P.O. BOX 4039
WARREN, NEW JERSEY 07059
PHONE: (732) 560-9700

CERTIFICATE OF AUTHORIZATION NO. 24GA28032700

ALL DIMENSIONS MUST BE VERIFIED BY THE CONTRACTOR. NOTIFY PAULUS, SOKOLOWSKI AND SARTOR, LLC OF ANY CONFLICTS, ERRORS, AMBIGUITIES OR DISCREPANCIES IN THE CONTRACT DRAWINGS OR SPECIFICATIONS BEFORE PROCEEDING WITH CONSTRUCTION.

ALL DIMENSIONS SHALL BE AS NOTED IN WORDS OR NUMBERS, ON THE CONTRACT DRAWINGS. DO NOT SCALE THE DRAWINGS TO DETERMINE DIMENSIONS.

THESE CONTRACT DRAWINGS CONTAIN DATA INTENDED SPECIFICALLY FOR THE NOTED PROJECT AND CLIENT. THEY ARE NOT INTENDED FOR USE ON EXTENSIONS OF THIS PROJECT OR FOR REUSE ON ANY OTHER PROJECT.

THE COPYING AND/OR MODIFICATION OF THIS DOCUMENT OR ANY PORTION THEREOF WITHOUT THE WRITTEN PERMISSION OF PAULUS, SOKOLOWSKI AND SARTOR, LLC. IS PROHIBITED.

UNLESS THESE DRAWINGS ARE SPECIFICALLY DESIGNATED AS "CONSTRUCTION ISSUE", THESE DRAWINGS SHALL NOT BE USED FOR CONSTRUCTION OR IMPROVEMENTS. DEPICTED CONSTRUCTION CONTRACTORS SHALL NOTIFY THE DESIGN ENGINEER TO OBTAIN CONSTRUCTION DOCUMENTS.

COPYRIGHT 2019 PAULUS, SOKOLOWSKI AND SARTOR, LLC – ALL RIGHTS RESERVED.

1/7/2019

CLIENT

PROJECT

NEW JERSEY
CENTER OF EXCELLENCE

1041 N.J.S.H. ROUTE 202/206
BLOCK 483, LOTS 17, 18 & 19

TOWNSHIP OF BRIDGEWATER
SOMERSET COUNTY, NEW JERSEY 08807

SHEET TITLE

PROFILES
(SHEET 13 OF 18)

JOB NO.:	00488.0041
DATE:	05/09/2018
DRAWN:	TB/CY
CHECK:	CH/LAD
SCALE:	Horizontal: 1" = 50' Vertical: 1" = 5'

SHEET NO. 16.14 OF 75

C-16.14

FILE NAME: P:\00488\004\DWG\C-Cut\Profiles\C-16.14 PROFILES.dwg, C-16.14, LAST EDIT: 01/07/2019 - 02:13:33 PM, CADtek Services®

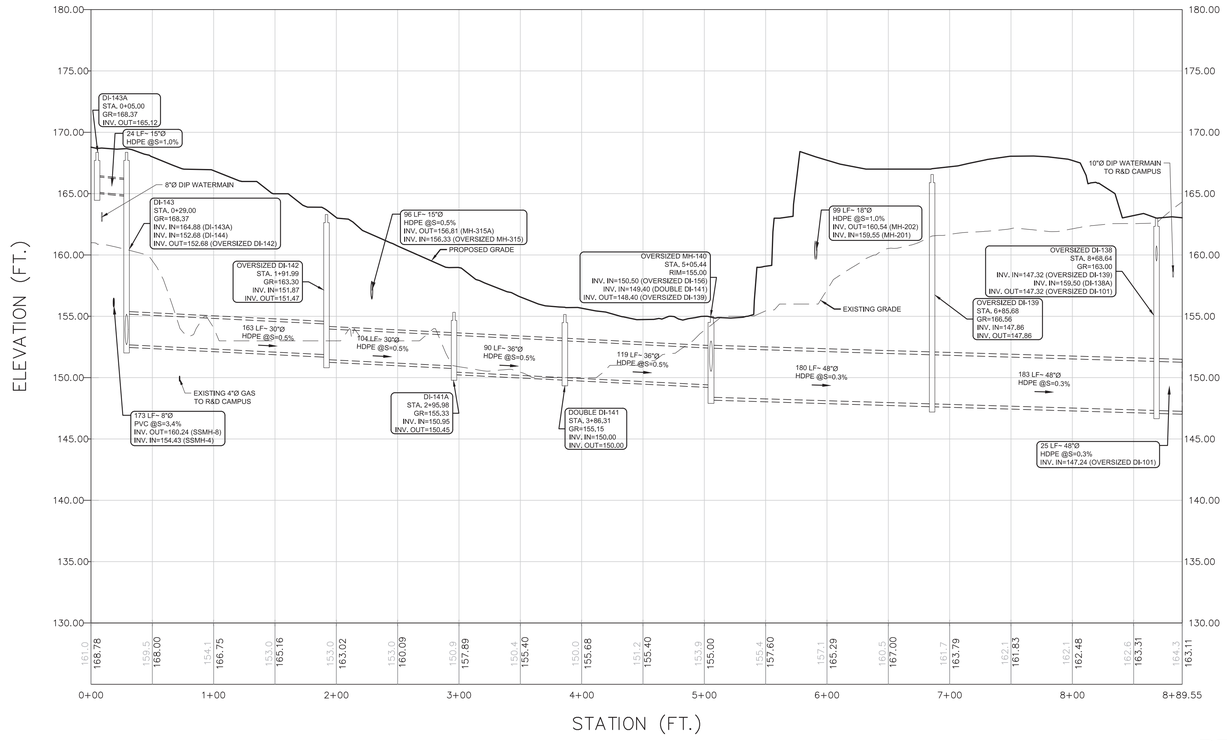

PROFILE OF ALIGNMENT - DI-143A TO DI-138

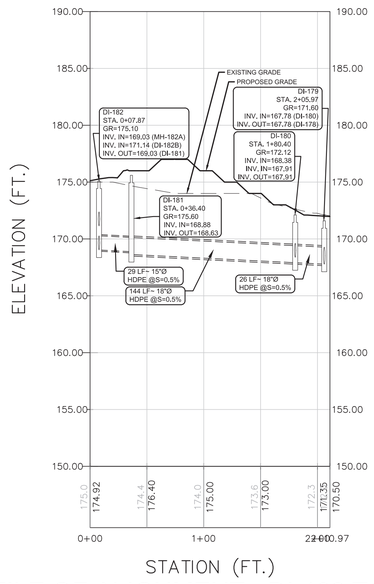

PROFILE OF ALIGNMENT - DI-182 TO DI-179

VERTICAL SCALE

5 0 2.5 5 10 20

(IN FEET)
1 inch = 5 ft.

HORIZONTAL SCALE

50 0 25 50 100 200

(IN FEET)
1 inch = 50 ft.

REV. / ISSUE	DATE	DESCRIPTION
1	11/12/18	REVISED PER BOARD COMMENTS
2	1/07/19	REVISED PER BOARD COMMENTS

CONSULTANT

ORIENTATION / KEY PLAN

PAULUS, SOKOLOWSKI AND SARTOR, LLC

67A MOUNTAIN BLVD EXT.
P.O. BOX 4039
WARREN, NEW JERSEY 07059
PHONE: (732) 560-9700

CERTIFICATE OF AUTHORIZATION NO. 24GA28032700

ALL DIMENSIONS MUST BE VERIFIED BY THE CONTRACTOR. NOTIFY PAULUS, SOKOLOWSKI AND SARTOR, LLC OF ANY DISCREPANCIES BETWEEN THE CONTRACT DRAWINGS AND THE CONTRACT DRAWINGS OR SPECIFICATIONS BEFORE PROCEEDING WITH CONSTRUCTION.

ALL DIMENSIONS SHALL BE AS NOTED IN WORDS OR NUMBERS ON THE CONTRACT DRAWINGS. DO NOT SCALE THE DRAWINGS TO DETERMINE DIMENSIONS.

THESE CONTRACT DRAWINGS CONTAIN DATA INTENDED SPECIFICALLY FOR THE NOTED PROJECT AND CLIENT, THEY ARE NOT INTENDED FOR USE ON EXTENSIONS OF THIS PROJECT OR FOR REUSE ON ANY OTHER PROJECT.

THE COPYING AND/OR MODIFICATION OF THIS DOCUMENT OR ANY PORTION THEREOF WITHOUT THE WRITTEN PERMISSION OF PAULUS, SOKOLOWSKI AND SARTOR, LLC. IS PROHIBITED.

UNLESS THESE DRAWINGS ARE SPECIFICALLY DESIGNATED AS "CONSTRUCTION ISSUE", THESE DRAWINGS SHALL NOT BE USED FOR CONSTRUCTION OR IMPROVEMENTS DEPICTED HEREIN. CONTRACTORS SHALL NOTIFY THE DESIGN ENGINEER TO OBTAIN CONSTRUCTION DOCUMENTS.

COPYRIGHT 2019 PAULUS, SOKOLOWSKI AND SARTOR, LLC – ALL RIGHTS RESERVED.

NEW JERSEY
37067
LICENSED
PROFESSIONAL ENGINEER

1/7/2019

CLIENT

PROJECT

NEW JERSEY
CENTER OF EXCELLENCE

1041 N.J.S.H. ROUTE 202/206
BLOCK 483, LOTS 17, 18 & 19

TOWNSHIP OF BRIDGEWATER
SOMERSET COUNTY, NEW JERSEY 08807

SHEET TITLE

PROFILES
(SHEET 14 OF 18)

JOB NO.:	00488.0041
DATE:	05/09/2018
DRAWN:	TB/CY
CHECK:	CH/LAD
SCALE:	Horizontal: 1" = 50' Vertical: 1" = 5'

SHEET NO. 16.15 OF 75

C-16.15

FILENAME: P:\00488\041\DWG\C-Civil\Prints\C-13-14 PROFILES.dwg | C-16.15 | LAST EDIT: 01/07/2019 - 02:13:51 PM | LOGIN: lbennage@

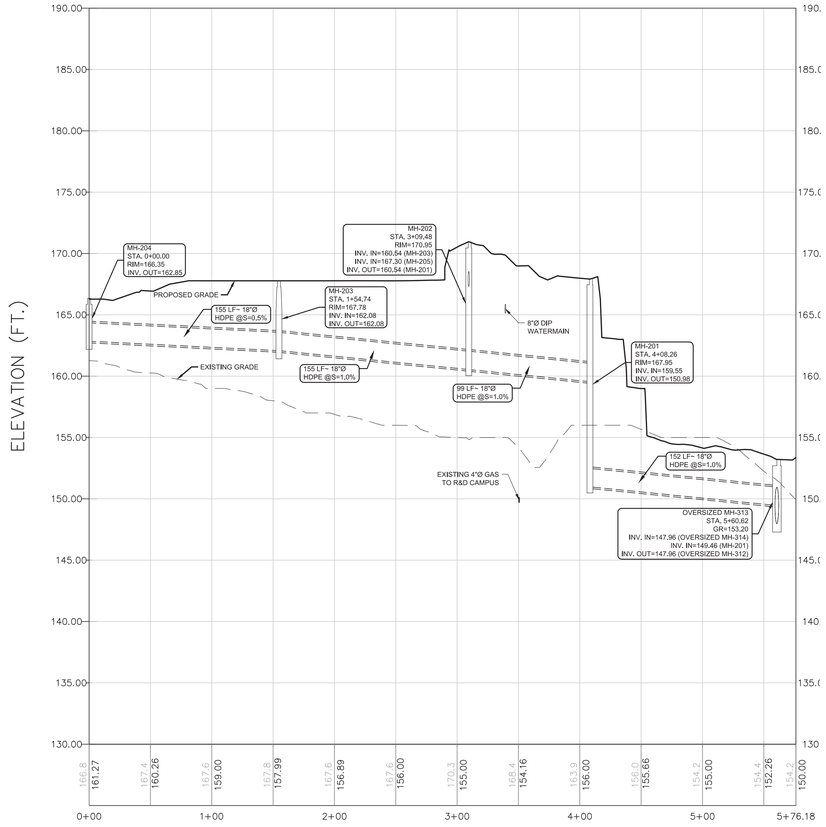

PROFILE OF ALIGNMENT - MH-204 TO MH-313

VERTICAL SCALE

(IN FEET)
1 inch = 5 ft.

HORIZONTAL SCALE

(IN FEET)
1 inch = 50 ft.

REV. / ISSUE	DATE	DESCRIPTION
1	11/12/18	REVISED PER BOARD COMMENTS
2	1/07/19	REVISED PER BOARD COMMENTS

CONSULTANT

ORIENTATION / KEY PLAN

PAULUS, SOKOLOWSKI AND SARTOR, LLC

67A MOUNTAIN BLVD EXT.
P.O. BOX 4039
WARREN, NEW JERSEY 07059
PHONE: (732) 560-9700

CERTIFICATE OF AUTHORIZATION NO. 24GA28032700

ALL DIMENSIONS MUST BE VERIFIED BY THE CONTRACTOR. NOTIFY PAULUS, SOKOLOWSKI AND SARTOR, LLC OF ANY CONFLICTS, ERRORS, AMBIGUITIES OR DISCREPANCIES IN THE CONTRACT DRAWINGS OR SPECIFICATIONS BEFORE PROCEEDING WITH CONSTRUCTION.

ALL DIMENSIONS SHALL BE AS NOTED IN WORDS OR NUMBERS ON THE CONTRACT DRAWINGS. DO NOT SCALE THE DRAWINGS TO DETERMINE DIMENSIONS.

THESE CONTRACT DRAWINGS CONTAIN DATA INTENDED SPECIFICALLY FOR THE NOTED PROJECT AND CLIENT. THEY ARE NOT INTENDED FOR USE ON EXTENSIONS OF THIS PROJECT OR FOR REUSE ON ANY OTHER PROJECT.

THE COPYING AND/OR MODIFICATION OF THIS DOCUMENT OR ANY PORTION THEREOF WITHOUT THE WRITTEN PERMISSION OF PAULUS, SOKOLOWSKI AND SARTOR, LLC IS PROHIBITED.

UNLESS THESE DRAWINGS ARE SPECIFICALLY DESIGNATED AS "CONSTRUCTION ISSUE", THESE DRAWINGS SHALL NOT BE USED FOR CONSTRUCTION OR IMPROVEMENTS DEPICTED HEREIN. CONTRACTORS SHALL NOTIFY THE DESIGN ENGINEER TO OBTAIN CONSTRUCTION DOCUMENTS.

COPYRIGHT 2019 PAULUS, SOKOLOWSKI AND SARTOR, LLC. – ALL RIGHTS RESERVED.



1/7/2019

CLIENT

PROJECT

NEW JERSEY
CENTER OF EXCELLENCE

1041 N.J.S.H. ROUTE 202/206
BLOCK 483, LOTS 17, 18 & 19

TOWNSHIP OF BRIDGEWATER
SOMERSET COUNTY, NEW JERSEY 08807

SHEET TITLE

PROFILES
(SHEET 15 OF 18)

JOB NO.:	00488.0041
DATE:	05/09/2018
DRAWN:	TB/CY
CHECK:	CH/LAD
SCALE:	Horizontal: 1" = 50' Vertical: 1" = 5'

SHEET NO. 16.16 OF 75

C-16.16

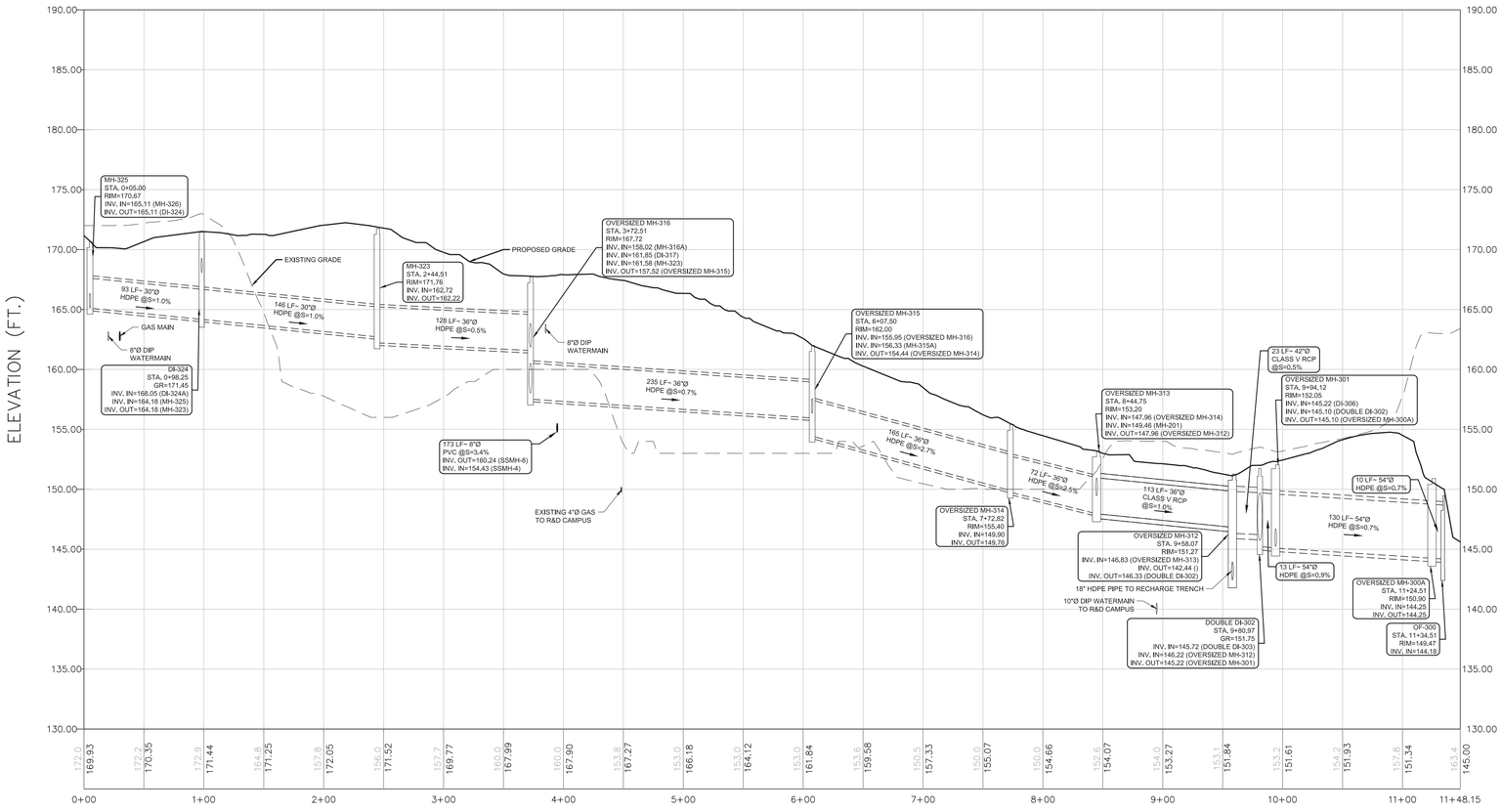

PROFILE OF ALIGNMENT - MH-325 TO OF-300

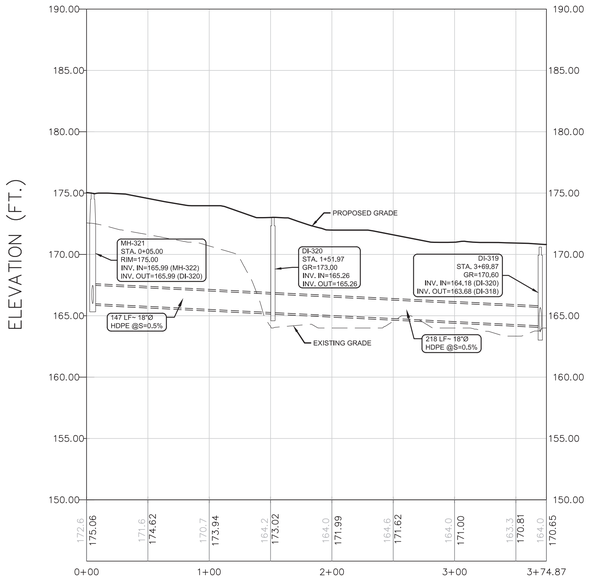

PROFILE OF ALIGNMENT - MH-321 TO DI-319

VERTICAL SCALE

5 0 2.5 5 10 20

(IN FEET)
1 inch = 5 ft.

HORIZONTAL SCALE

50 0 25 50 100 200

(IN FEET)
1 inch = 50 ft.

REV. / ISSUE	DATE	DESCRIPTION
1	11/12/18	REVISED PER BOARD COMMENTS
2	1/07/19	REVISED PER BOARD COMMENTS

CONSULTANT

ORIENTATION / KEY PLAN

PAULUS, SOKOLOWSKI AND SARTOR, LLC

67A MOUNTAIN BLVD EXT.
P.O. BOX 4039
WARREN, NEW JERSEY 07059
PHONE: (732) 560-9700

CERTIFICATE OF AUTHORIZATION NO. 24GA28032700

ALL DIMENSIONS MUST BE VERIFIED BY THE CONTRACTOR. NOTIFY PAULUS, SOKOLOWSKI AND SARTOR, LLC OF ANY CONFLICTS, ERRORS, AMBIGUITIES OR DISCREPANCIES IN THE CONTRACT DRAWINGS OR SPECIFICATIONS BEFORE PROCEEDING WITH CONSTRUCTION.

ALL DIMENSIONS SHALL BE AS NOTED IN WORDS OR NUMBERS ON THE CONTRACT DRAWINGS. DO NOT SCALE THE DRAWINGS TO DETERMINE DIMENSIONS.

THESE CONTRACT DRAWINGS CONTAIN DATA INTENDED SPECIFICALLY FOR THE NOTED PROJECT AND CLIENT. THEY ARE NOT INTENDED FOR USE ON EXTENSIONS OF THIS PROJECT OR FOR REUSE ON ANY OTHER PROJECT.

THE COPYING AND/OR MODIFICATION OF THIS DOCUMENT OR ANY PORTION THEREOF WITHOUT THE WRITTEN PERMISSION OF PAULUS, SOKOLOWSKI AND SARTOR, LLC. IS PROHIBITED.

UNLESS THESE DRAWINGS ARE SPECIFICALLY DESIGNATED AS "CONSTRUCTION ISSUE", THEY SHALL NOT BE USED FOR BIDDING, PERMITTING OR CONSTRUCTION PURPOSES. IN ADDITION, CONTRACTORS SHALL NOTIFY THE DESIGN ENGINEER TO OBTAIN CONSTRUCTION DOCUMENTS.

COPYRIGHT 2019 PAULUS, SOKOLOWSKI AND SARTOR, LLC – ALL RIGHTS RESERVED.



1/7/2019

CLIENT

PROJECT

NEW JERSEY
CENTER OF EXCELLENCE

1041 N.J.S.H. ROUTE 202/206
BLOCK 483, LOTS 17, 18 & 19

TOWNSHIP OF BRIDGEWATER
SOMERSET COUNTY, NEW JERSEY 08807

SHEET TITLE

PROFILES
(SHEET 16 OF 18)

JOB NO.:	00488.0041
DATE:	05/09/2018
DRAWN:	TB/CY
CHECK:	CH/LAD
SCALE:	Horizontal: 1" = 50' Vertical: 1" = 5'

SHEET NO. 16.17 OF 75

C-16.17

FILENAME: P:\00488\001\Office\Civil\Plotting\C-13-14 PROFILES.dwg (C-16.17 LAST EDIT: 1/07/2019 - 03:14 PM - CIOFFI, Benjamin)

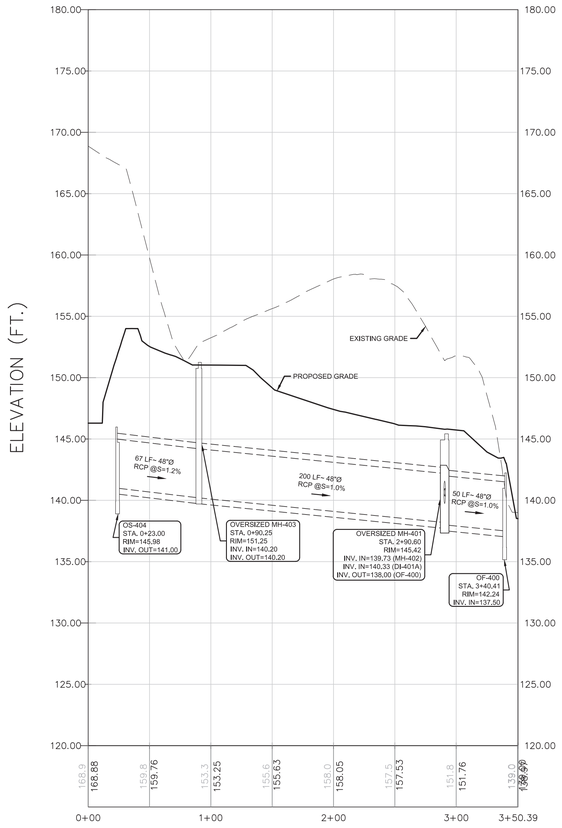

PROFILE OF ALIGNMENT - OS-404 TO OF-400

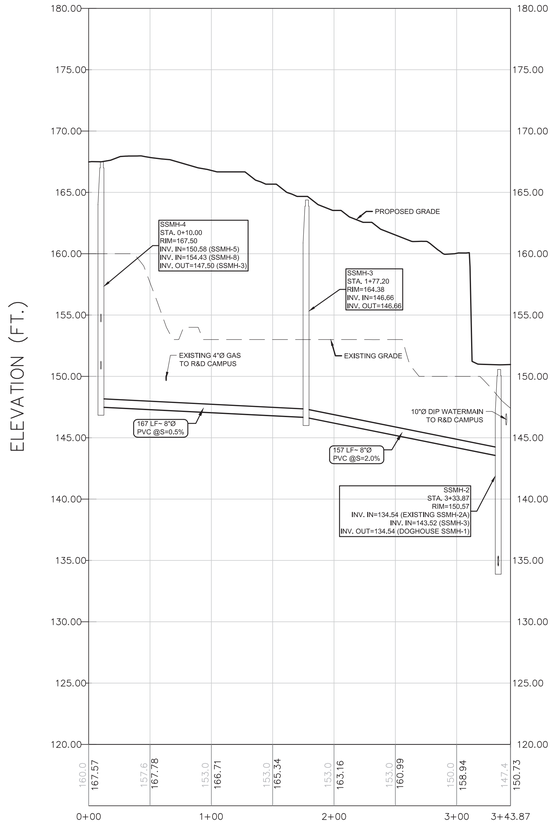

PROFILE OF ALIGNMENT -
SSMH-4 TO SSMH-2

VERTICAL SCALE

5 0 2.5 5 10 20

(IN FEET)
1 inch = 5 ft.

HORIZONTAL SCALE

50 0 25 50 100 200

(IN FEET)
1 inch = 50 ft.

REV. / ISSUE	DATE	DESCRIPTION
1	11/12/18	REVISED PER BOARD COMMENTS
2	1/07/19	REVISED PER BOARD COMMENTS

CONSULTANT

ORIENTATION / KEY PLAN

PAULUS, SOKOLOWSKI AND SARTOR, LLC

67A MOUNTAIN BLVD EXT.
P.O. BOX 4039
WARREN, NEW JERSEY 07059
PHONE: (732) 560-9700

CERTIFICATE OF AUTHORIZATION NO. 24GA28032700

ALL DIMENSIONS MUST BE VERIFIED BY THE CONTRACTOR. NOTIFY PAULUS, SOKOLOWSKI AND SARTOR, LLC OF ANY DISCREPANCIES OR OMISSIONS BETWEEN THE CONTRACT DRAWINGS OR SPECIFICATIONS BEFORE PROCEEDING WITH CONSTRUCTION.

ALL DIMENSIONS SHALL BE AS NOTED IN WORDS OR NUMBERS ON THE CONTRACT DRAWINGS. DO NOT SCALE THE DRAWINGS TO DETERMINE DIMENSIONS.

THESE CONTRACT DRAWINGS CONTAIN DATA INTENDED SPECIFICALLY FOR THE NOTED PROJECT AND CLIENT. THEY ARE NOT INTENDED FOR USE ON EXTENSIONS OF THIS PROJECT OR FOR REUSE ON ANY OTHER PROJECT.

THE COPYING AND/OR MODIFICATION OF THIS DOCUMENT OR ANY PORTION THEREOF WITHOUT THE WRITTEN PERMISSION OF PAULUS, SOKOLOWSKI AND SARTOR, LLC. IS PROHIBITED.

UNLESS THESE DRAWINGS ARE SPECIFICALLY DESIGNATED AS "CONSTRUCTION ISSUE", THEY SHALL NOT BE USED FOR CONSTRUCTION OR IMPLEMENTATION PURPOSES. HEREIN, CONTRACTORS SHALL NOTIFY THE DESIGN ENGINEER TO OBTAIN CONSTRUCTION DOCUMENTS.

COPYRIGHT 2019 PAULUS, SOKOLOWSKI AND SARTOR, LLC – ALL RIGHTS RESERVED.

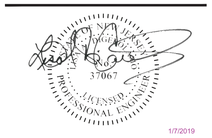

1/7/2019

CLIENT

PROJECT

NEW JERSEY
CENTER OF EXCELLENCE

1041 N.J.S.H. ROUTE 202/206
BLOCK 483, LOTS 17, 18 & 19

TOWNSHIP OF BRIDGEWATER
SOMERSET COUNTY, NEW JERSEY 08807

SHEET TITLE

PROFILES
(SHEET 17 OF 18)

JOB NO.:	00488.0041
DATE:	05/09/2018
DRAWN:	TB/CY
CHECK:	CH/LAD
SCALE:	Horizontal: 1" = 50' Vertical: 1" = 5'

SHEET NO. 16.18 OF 75

C-16.18

FILENAME: P:\00488\0041\Drf\Civil_Cad\Plotting\C-16.18 PROFILES.dwg LC-16.18 LAST EDIT: 01/07/2019 - 02:14:34 PM LOGIN: tbennett

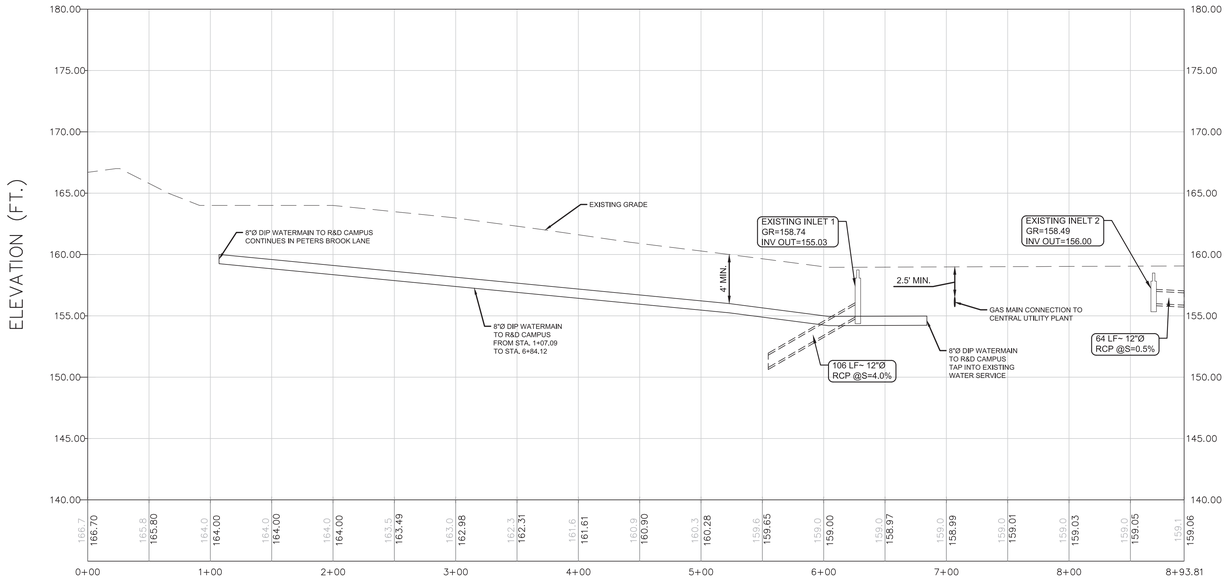

PROFILE OF ALIGNMENT - 12TH AVENUE

VERTICAL SCALE

(IN FEET)
1 inch = 5 ft.

HORIZONTAL SCALE

(IN FEET)
1 inch = 50 ft.

REV. / ISSUE	DATE	DESCRIPTION
1	11/12/18	REVISED PER BOARD COMMENTS
2	1/07/19	REVISED PER BOARD COMMENTS

CONSULTANT

ORIENTATION / KEY PLAN

PAULUS, SOKOLOWSKI AND SARTOR, LLC

67A MOUNTAIN BLVD EXT.
P.O. BOX 4039
WARREN, NEW JERSEY 07059
PHONE: (732) 560-9700

CERTIFICATE OF AUTHORIZATION NO. 24GA28032700

ALL DIMENSIONS MUST BE VERIFIED BY THE CONTRACTOR. NOTIFY PAULUS, SOKOLOWSKI AND SARTOR, LLC OF ANY CONFLICTS, ERRORS, AMBIGUITIES OR DISCREPANCIES IN THE CONTRACT DRAWINGS OR SPECIFICATIONS BEFORE PROCEEDING WITH CONSTRUCTION.

ALL DIMENSIONS SHALL BE AS NOTED IN WORDS OR NUMBERS ON THE CONTRACT DRAWINGS. DO NOT SCALE THE DRAWINGS TO DETERMINE DIMENSIONS.

THESE CONTRACT DRAWINGS CONTAIN DATA INTENDED SPECIFICALLY FOR THE NOTED PROJECT AND CLIENT. THEY ARE NOT INTENDED FOR USE ON EXTENSIONS OF THIS PROJECT OR FOR REUSE ON ANY OTHER PROJECT.

THE COPYING AND/OR MODIFICATION OF THIS DOCUMENT OR ANY PORTION THEREOF WITHOUT THE WRITTEN PERMISSION OF PAULUS, SOKOLOWSKI AND SARTOR, LLC. IS PROHIBITED.

UNLESS THESE DRAWINGS ARE SPECIFICALLY DESIGNATED AS "CONSTRUCTION ISSUE", THESE DRAWINGS SHALL NOT BE USED FOR CONSTRUCTION OR IMPROVEMENTS DEPICTED HEREIN. CONTRACTORS SHALL NOTIFY THE DESIGN ENGINEER TO OBTAIN CONSTRUCTION DOCUMENTS.

COPYRIGHT 2019 PAULUS, SOKOLOWSKI AND SARTOR, LLC. – ALL RIGHTS RESERVED.



1/7/2019

CLIENT

PROJECT

NEW JERSEY
CENTER OF EXCELLENCE

1041 N.J.S.H. ROUTE 202/206
BLOCK 483, LOTS 17, 18 & 19

TOWNSHIP OF BRIDGEWATER
SOMERSET COUNTY, NEW JERSEY 08807

SHEET TITLE

PROFILES
(SHEET 18 OF 18)

JOB NO.:	00488.0041
DATE:	05/09/2018
DRAWN:	TB/CY
CHECK:	CH/LAD
SCALE:	Horizontal: 1" = 50' Vertical: 1" = 5'

SHEET NO. 16.19 OF 75

C-16.19

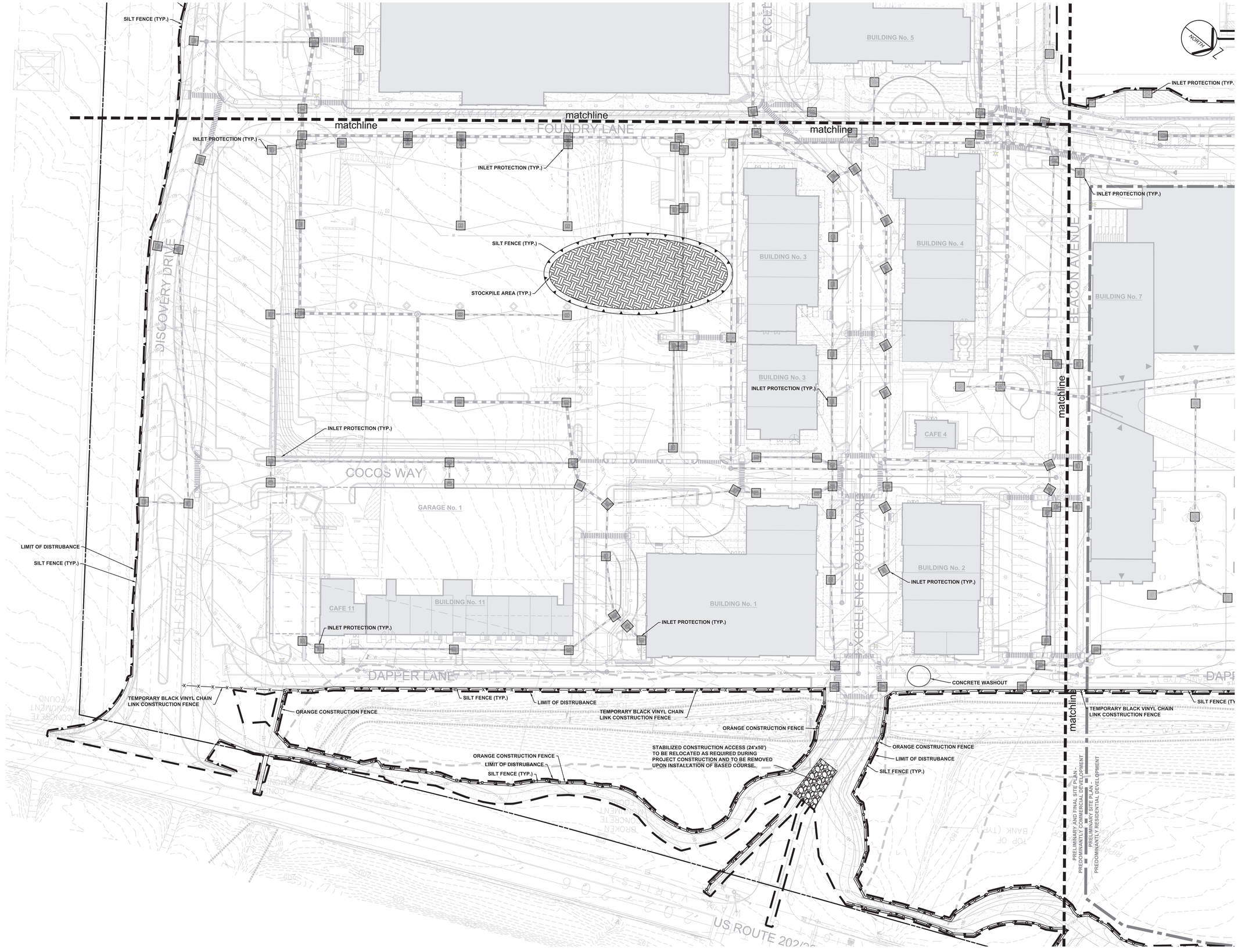

NOTE:
ANY SCREENING ON "TEMPORARY BLACK VINYL CHAIN LINK CONSTRUCTION FENCE" TO BE SOLID

REV. / ISSUE	DATE	DESCRIPTION
1	11/12/18	REVISED PER BOARD COMMENTS
2	1/07/19	REVISED PER BOARD COMMENTS

CONSULTANT

ORIENTATION / KEY PLAN

PAULUS, SOKOLOWSKI AND SARTOR, LLC
67A MOUNTAIN BLVD EXT.
P.O. BOX 4039
WARREN, NEW JERSEY 07059
PHONE: (732) 560-9700
CERTIFICATE OF AUTHORIZATION NO. 24GA28032700

ALL DIMENSIONS MUST BE VERIFIED BY THE CONTRACTOR NOTIFY PAULUS, SOKOLOWSKI AND SARTOR, LLC OF ANY CONFLICTS, ERRORS, AMBIGUITIES OR DISCREPANCIES IN THE CONTRACT DRAWINGS OR SPECIFICATIONS BEFORE PROCEEDING WITH CONSTRUCTION.

ALL DIMENSIONS SHALL BE AS NOTED IN WORDS OR NUMBERS ON THE CONTRACT DRAWINGS. DO NOT SCALE THE DRAWINGS TO DETERMINE DIMENSIONS.

THESE CONTRACT DRAWINGS CONTAIN DATA INTENDED SPECIFICALLY FOR THE NOTED PROJECT AND CLIENT. THEY ARE NOT INTENDED FOR USE ON EXTENSIONS OF THIS PROJECT OR FOR REUSE ON ANY OTHER PROJECT.

THE COPYING AND/OR MODIFICATION OF THIS DOCUMENT OR ANY PORTION THEREOF WITHOUT THE WRITTEN PERMISSION OF PAULUS, SOKOLOWSKI AND SARTOR, LLC IS PROHIBITED.

UNLESS THESE DRAWINGS ARE SPECIFICALLY DESIGNATED AS "CONSTRUCTION ISSUE", THEY ARE NOT TO BE USED FOR CONSTRUCTION PURPOSES. PRIOR TO CONSTRUCTION HEREON, CONTRACTORS SHALL NOTIFY THE DESIGN ENGINEER TO OBTAIN CONSTRUCTION DOCUMENTS.

COPYRIGHT 2019 PAULUS, SOKOLOWSKI AND SARTOR, LLC – ALL RIGHTS RESERVED.



1/7/2019

CLIENT

PROJECT

NEW JERSEY
CENTER OF EXCELLENCE

1041 N.J.S.H. ROUTE 202/206
BLOCK 483, LOTS 17, 18 & 19

TOWNSHIP OF BRIDGEWATER
SOMERSET COUNTY, NEW JERSEY 08807

SHEET TITLE

SOIL EROSION
AND SEDIMENT
CONTROL PLAN
(SHEET 1 OF 4)

JOB NO.:	00488.0041
DATE:	05/09/2018
DRAWN:	TB/CY
CHECK:	CH/LAD
SCALE:	1" = 40'

SHEET NO. 17 OF 75

C-17

FILENAME: P:\00488\01\Drfting\Cad\Plans\pgm01-01-19 SESC PLAN.dwg, 01-07-19 LAST EDIT: 01/07/2019 02:18:33 PM LOGIN: bwenger

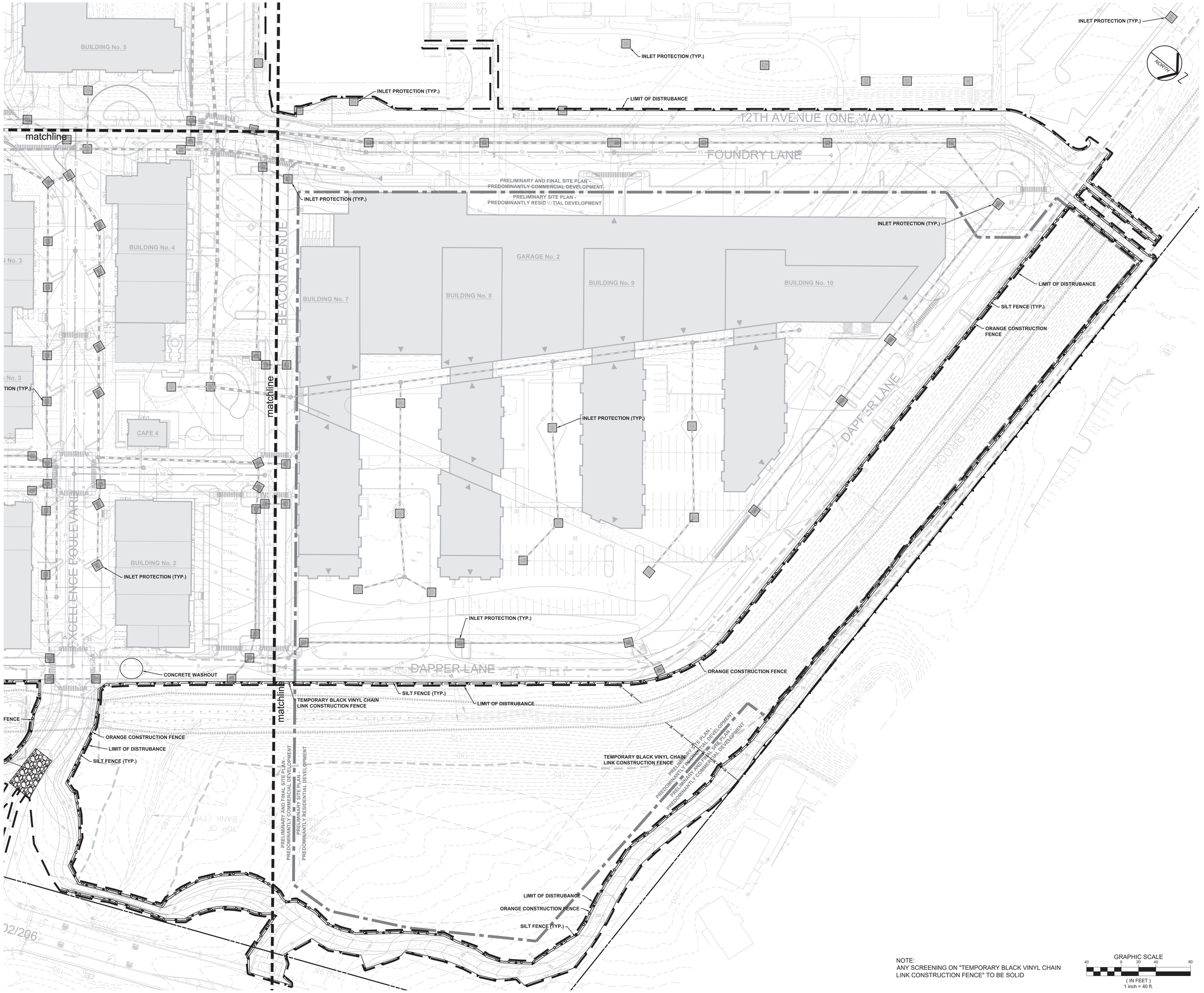

NOTE:
ANY SCREENING ON "TEMPORARY BLACK VINYL CHAIN LINK CONSTRUCTION FENCE" TO BE SOLID

GRAPHIC SCALE
40 0 20 40 80
(IN FEET)
1 inch = 40 ft.

REV. / ISSUE	DATE	DESCRIPTION
1	11/12/18	REVISED PER BOARD COMMENTS
2	1/07/19	REVISED PER BOARD COMMENTS

CONSULTANT

ORIENTATION / KEY PLAN

PAULUS, SOKOLOWSKI AND SARTOR, LLC
67A MOUNTAIN BLVD EXT.
P.O. BOX 4039
WARREN, NEW JERSEY 07059
PHONE: (732) 560-9700
CERTIFICATE OF AUTHORIZATION NO. 24GA28032700

ALL DIMENSIONS MUST BE VERIFIED BY THE CONTRACTOR. NOTIFY PAULUS, SOKOLOWSKI AND SARTOR, LLC OF ANY DISCREPANCIES BETWEEN THE CONTRACT DRAWINGS OR SPECIFICATIONS BEFORE PROCEEDING WITH CONSTRUCTION.

ALL DIMENSIONS SHALL BE AS NOTED IN WORDS OR NUMBERS ON THE CONTRACT DRAWINGS. DO NOT SCALE THE DRAWINGS TO DETERMINE DIMENSIONS.

THESE CONTRACT DRAWINGS CONTAIN DATA INTENDED SPECIFICALLY FOR THE NOTED PROJECT AND CLIENT. THEY ARE NOT INTENDED FOR USE ON EXTENSIONS OF THIS PROJECT OR FOR REUSE ON ANY OTHER PROJECT.

THE COPYING AND/OR MODIFICATION OF THIS DOCUMENT OR ANY PORTION THEREOF WITHOUT THE WRITTEN PERMISSION OF PAULUS, SOKOLOWSKI AND SARTOR, LLC. IS PROHIBITED.

UNLESS THESE DRAWINGS ARE SPECIFICALLY DESIGNATED AS "CONSTRUCTION ISSUE", THESE DRAWINGS SHALL NOT BE USED FOR CONSTRUCTION OR IMPROVEMENTS DEPICTED HEREIN. CONTRACTORS SHALL NOTIFY THE DESIGN ENGINEER TO OBTAIN CONSTRUCTION DOCUMENTS.

COPYRIGHT 2019 PAULUS, SOKOLOWSKI AND SARTOR, LLC – ALL RIGHTS RESERVED.



1/7/2019

CLIENT

PROJECT

NEW JERSEY
CENTER OF EXCELLENCE

1041 N.J.S.H. ROUTE 202/206
BLOCK 483, LOTS 17, 18 & 19

TOWNSHIP OF BRIDGEWATER
SOMERSET COUNTY, NEW JERSEY 08807

SHEET TITLE

SOIL EROSION
AND SEDIMENT
CONTROL PLAN
(SHEET 2 OF 4)

JOB NO.:	00488.0041
DATE:	05/09/2018
DRAWN:	TB/CY
CHECK:	CH/LAD
SCALE:	1" = 40'

SHEET NO. 18 OF 75

C-18

FILE NAME: P:\00488\0041\DWG\Civil\Plotting\C-17-19 SESC PLAN.dwg | C-18 | LAST EDIT: 1/7/2019 | 12:16:42 PM | CODA Numbering

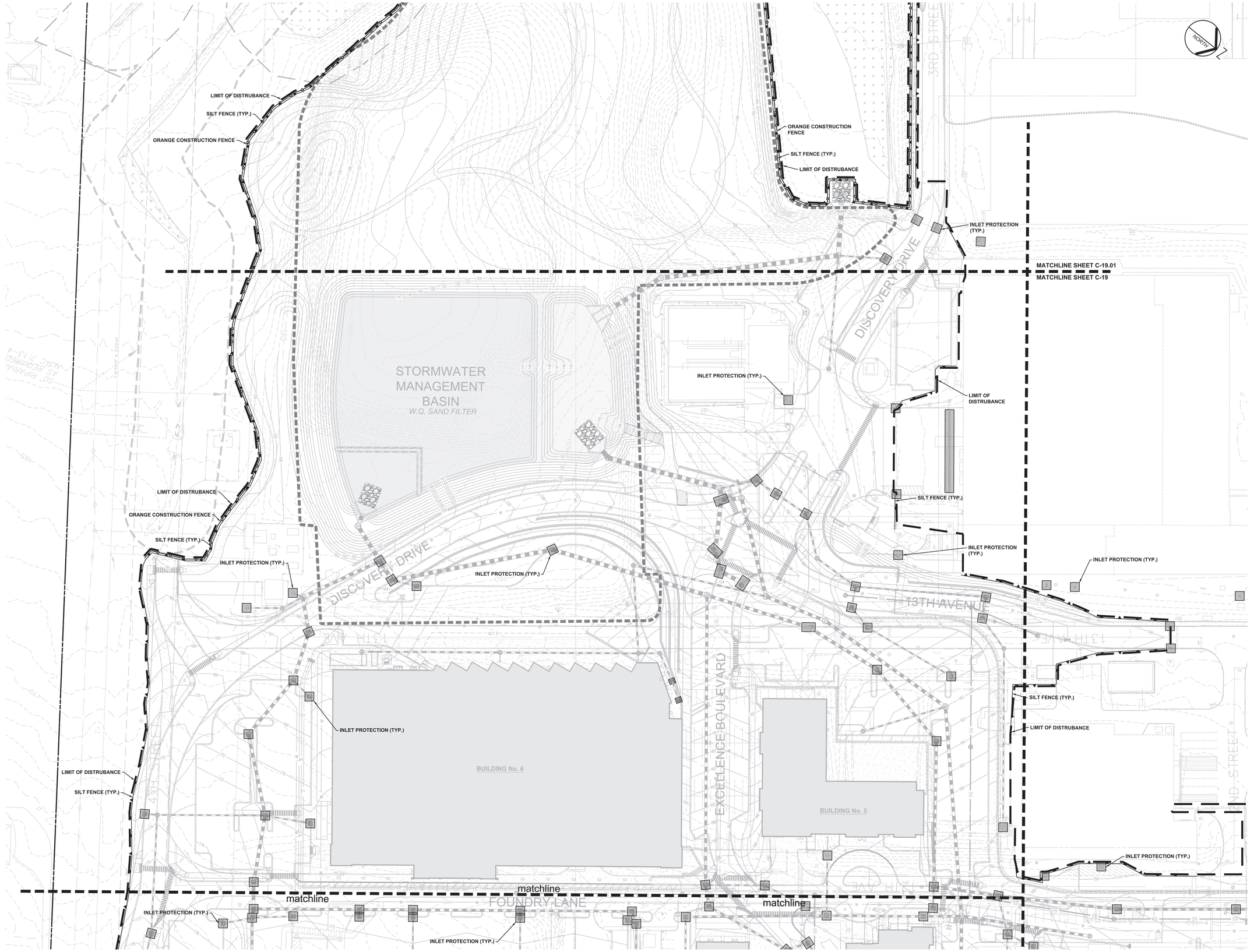

REV. / ISSUE	DATE	DESCRIPTION
1	11/12/18	REVISED PER BOARD COMMENTS
2	1/07/19	REVISED PER BOARD COMMENTS

CONSULTANT

ORIENTATION / KEY PLAN

PAULUS, SOKOLOWSKI AND SARTOR, LLC

67A MOUNTAIN BLVD EXT.
P.O. BOX 4039
WARREN, NEW JERSEY 07059
PHONE: (732) 560-9700

CERTIFICATE OF AUTHORIZATION NO. 24GA28032700

ALL DIMENSIONS MUST BE VERIFIED BY THE CONTRACTOR. NOTIFY PAULUS, SOKOLOWSKI AND SARTOR, LLC. OF ANY CONFLICTS, ERRORS, AMBIGUITIES OR DISCREPANCIES IN THE CONTRACT DRAWINGS OR SPECIFICATIONS BEFORE PROCEEDING WITH CONSTRUCTION.

ALL DIMENSIONS SHALL BE AS NOTED IN WORDS OR NUMBERS ON THE CONTRACT DRAWINGS. DO NOT SCALE THE DRAWINGS TO DETERMINE DIMENSIONS.

THESE CONTRACT DRAWINGS CONTAIN DATA INTENDED SPECIFICALLY FOR THE NOTED PROJECT AND CLIENT. THEY ARE NOT INTENDED FOR USE ON EXTENSIONS OF THIS PROJECT OR FOR REUSE ON ANY OTHER PROJECT.

THE COPYING AND/OR MODIFICATION OF THIS DOCUMENT OR ANY PORTION THEREOF WITHOUT THE WRITTEN PERMISSION OF PAULUS, SOKOLOWSKI AND SARTOR, LLC. IS PROHIBITED.

UNLESS THESE DRAWINGS ARE SPECIFICALLY DESIGNATED AS "CONSTRUCTION ISSUE", THESE DRAWINGS SHALL NOT BE USED FOR CONSTRUCTION OR IMPROVEMENTS DEPICTED HEREIN. CONTRACTORS SHALL NOTIFY THE DESIGN ENGINEER TO OBTAIN CONSTRUCTION DOCUMENTS.

COPYRIGHT 2019 PAULUS, SOKOLOWSKI AND SARTOR, LLC. – ALL RIGHTS RESERVED.

LICENSED PROFESSIONAL ENGINEER
37067
1/7/2019

CLIENT

PROJECT

NEW JERSEY
CENTER OF EXCELLENCE

1041 N.J.S.H. ROUTE 202/206
BLOCK 483, LOTS 17, 18 & 19

TOWNSHIP OF BRIDGEWATER
SOMERSET COUNTY, NEW JERSEY 08807

SHEET TITLE

SOIL EROSION AND SEDIMENT CONTROL PLAN (SHEET 3 OF 4)

JOB NO.:	00488.0041
DATE:	05/09/2018
DRAWN:	TB/CY
CHECK:	CH/LAD
SCALE:	1" = 40'

SHEET NO. 19 OF 75

C-19

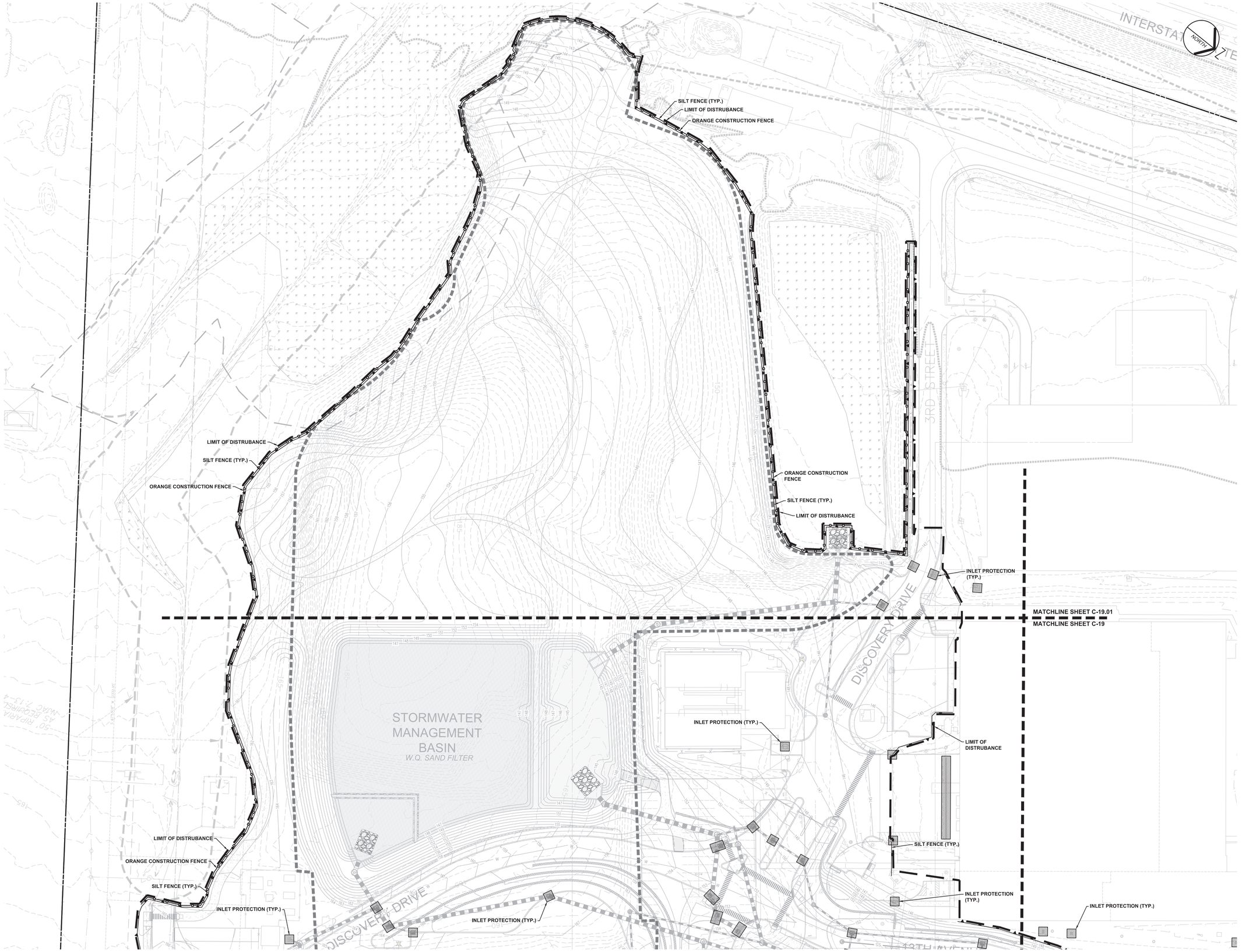

REV. / ISSUE	DATE	DESCRIPTION
1	11/12/18	REVISED PER BOARD COMMENTS
2	1/07/19	REVISED PER BOARD COMMENTS

CONSULTANT

ORIENTATION / KEY PLAN

PAULUS, SOKOLOWSKI AND SARTOR, LLC

67A MOUNTAIN BLVD EXT.
P.O. BOX 4039
WARREN, NEW JERSEY 07059
PHONE: (732) 560-9700

CERTIFICATE OF AUTHORIZATION NO. 24GA28032700

ALL DIMENSIONS MUST BE VERIFIED BY THE CONTRACTOR. NOTIFY PAULUS, SOKOLOWSKI AND SARTOR, LLC. OF ANY CONFLICTS, ERRORS, AMBIGUITIES OR DISCREPANCIES IN THE CONTRACT DRAWINGS OR SPECIFICATIONS BEFORE PROCEEDING WITH CONSTRUCTION.

ALL DIMENSIONS SHALL BE AS NOTED IN WORDS OR NUMBERS ON THE CONTRACT DRAWINGS. DO NOT SCALE THE DRAWINGS TO DETERMINE DIMENSIONS.

THESE CONTRACT DRAWINGS CONTAIN DATA INTENDED SPECIFICALLY FOR THE NOTED PROJECT AND CLIENT. THEY ARE NOT INTENDED FOR USE ON EXTENSIONS OF THIS PROJECT OR FOR REUSE ON ANY OTHER PROJECT.

THE COPYING AND/OR MODIFICATION OF THIS DOCUMENT OR ANY PORTION THEREOF WITHOUT THE WRITTEN PERMISSION OF PAULUS, SOKOLOWSKI AND SARTOR, LLC. IS PROHIBITED.

UNLESS THESE DRAWINGS ARE SPECIFICALLY DESIGNATED AS "CONSTRUCTION ISSUE", THEY ARE NOT INTENDED FOR USE AS CONSTRUCTION DOCUMENTS. PRIOR TO CONSTRUCTION, INTERIOR CONTRACTORS SHALL NOTIFY THE DESIGN ENGINEER TO OBTAIN CONSTRUCTION DOCUMENTS.

COPYRIGHT 2019 PAULUS, SOKOLOWSKI AND SARTOR, LLC. – ALL RIGHTS RESERVED.



1/7/2019

CLIENT

PROJECT

NEW JERSEY
CENTER OF EXCELLENCE

1041 N.J.S.H. ROUTE 202/206
BLOCK 483, LOTS 17, 18 & 19

TOWNSHIP OF BRIDGEWATER
SOMERSET COUNTY, NEW JERSEY 08807

SHEET TITLE

SOIL EROSION
AND SEDIMENT
CONTROL PLAN
(SHEET 4 OF 4)

JOB NO.:	00488.0041
DATE:	05/09/2018
DRAWN:	TB/CY
CHECK:	CH/LAD
SCALE:	1" = 40'

SHEET NO. 19.01 OF 75

C-19.01

FILE NAME: P:\00488\001\Drfts\Cad\Plotting\pC-19.01 SESC PLAN.dwg C-19.01 LAST EDIT: 01/07/2019 - 05:17:09 PM - USER: tbenning

REV. / ISSUE	DATE	DESCRIPTION
1	11/12/18	REVISED PER BOARD COMMENTS
2	1/07/19	REVISED PER BOARD COMMENTS

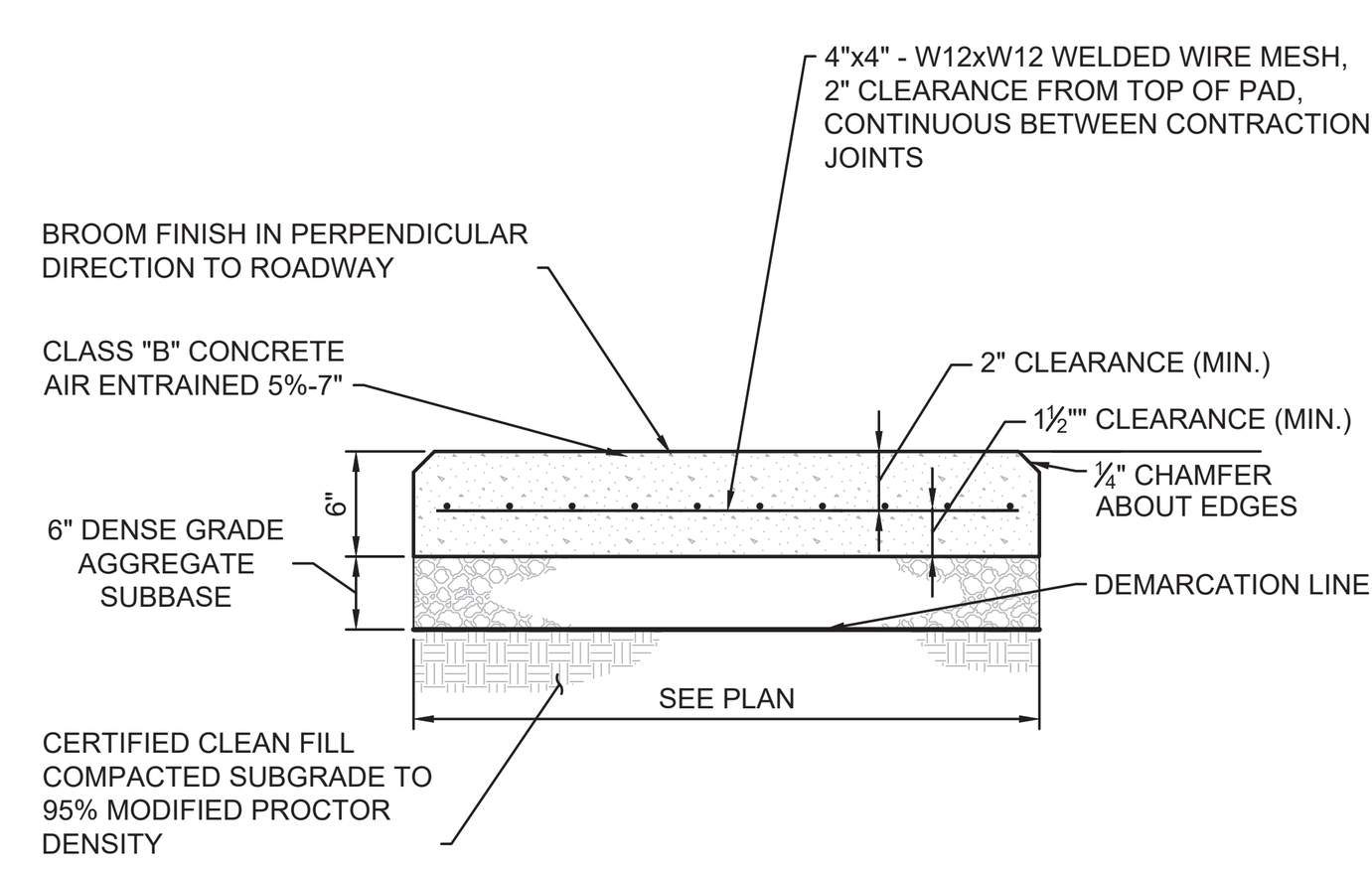

NOTES:
1. TRANSVERSE JOINTS COMPRISED OF 1/2" WIDE IMPREGNATED JOINT FILLER COMPLYING WITH THE REQUIREMENTS OF A.A.S.H.T.O., FLUSH WITH FINISHED GRADE SHALL BE INSTALLED IN ONE CONTINUOUS PIECE FOR THE ENTIRE WIDTH 10'-0" ON CENTER.
2. FINAL DESIGN TO BE VERIFIED PRIOR TO CONSTRUCTION.
3. TOP OF CONCRETE PAD TO BE FLUSH WITH PAVEMENT

1 CONCRETE PAD
SCALE: NTS

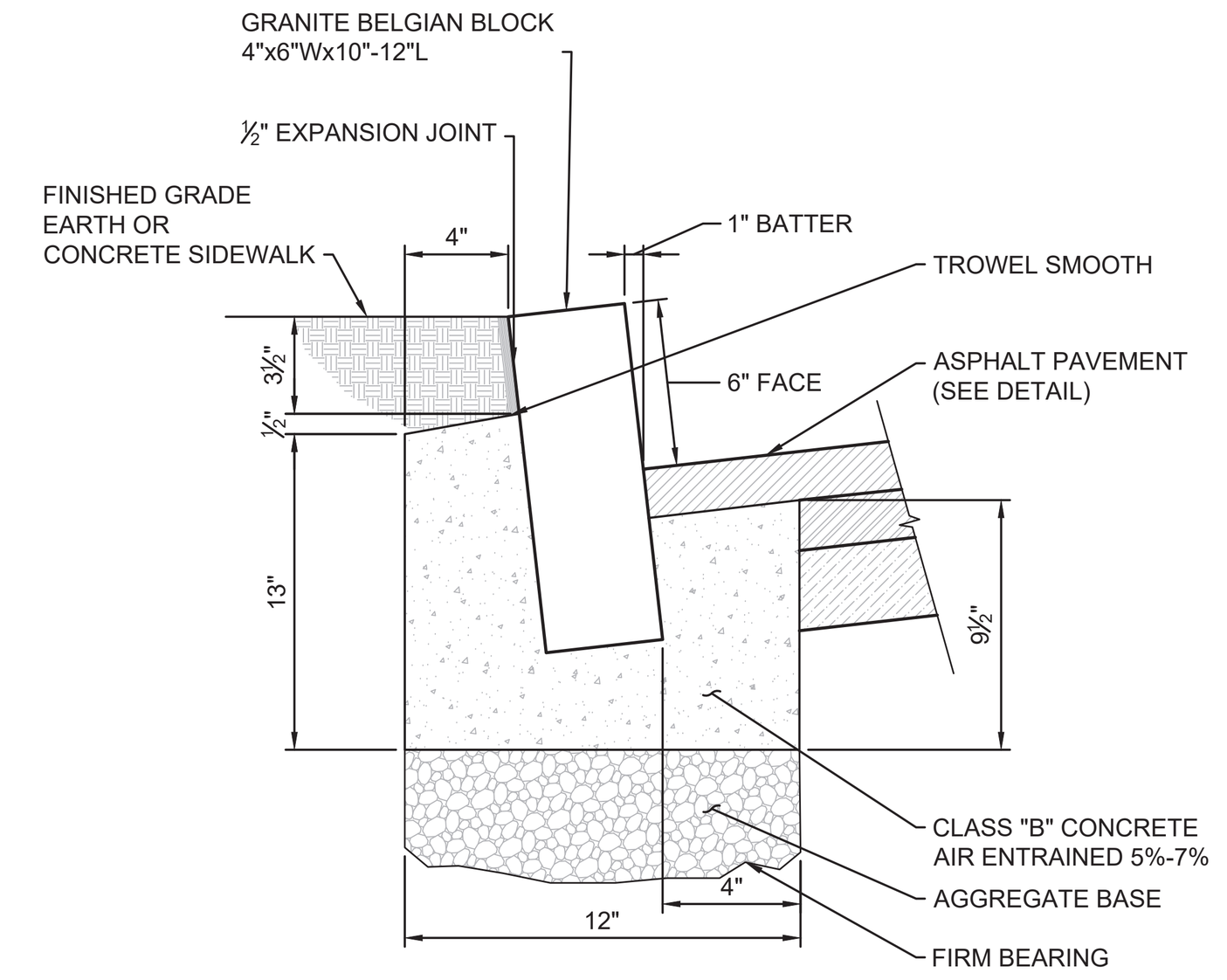

NOTES:
1. BANK RUN GRAVEL OR ¾" CLEAN STONE MAY BE REQUIRED FOR GRADE ADJUSTMENTS.
2. ALL JOINTS TO BE MORTARED USING 1 PART PORTLAND CEMENT TO 2 PARTS CLEAN MASON SAND TO 1 PART WATER (1:2:1).
3. ½" PREFORMED EXPANSION JOINT FILLER TO BE BITUMINOUS TYPE AND INSTALLED BETWEEN CURB AND CONCRETE PAVEMENT OR CONCRETE BASE COURSE WITH A DEPTH EQUAL TO THE THICKNESS OF PAVEMENT LESS ½".

2 BELGIAN BLOCK CURB
SCALE: NTS

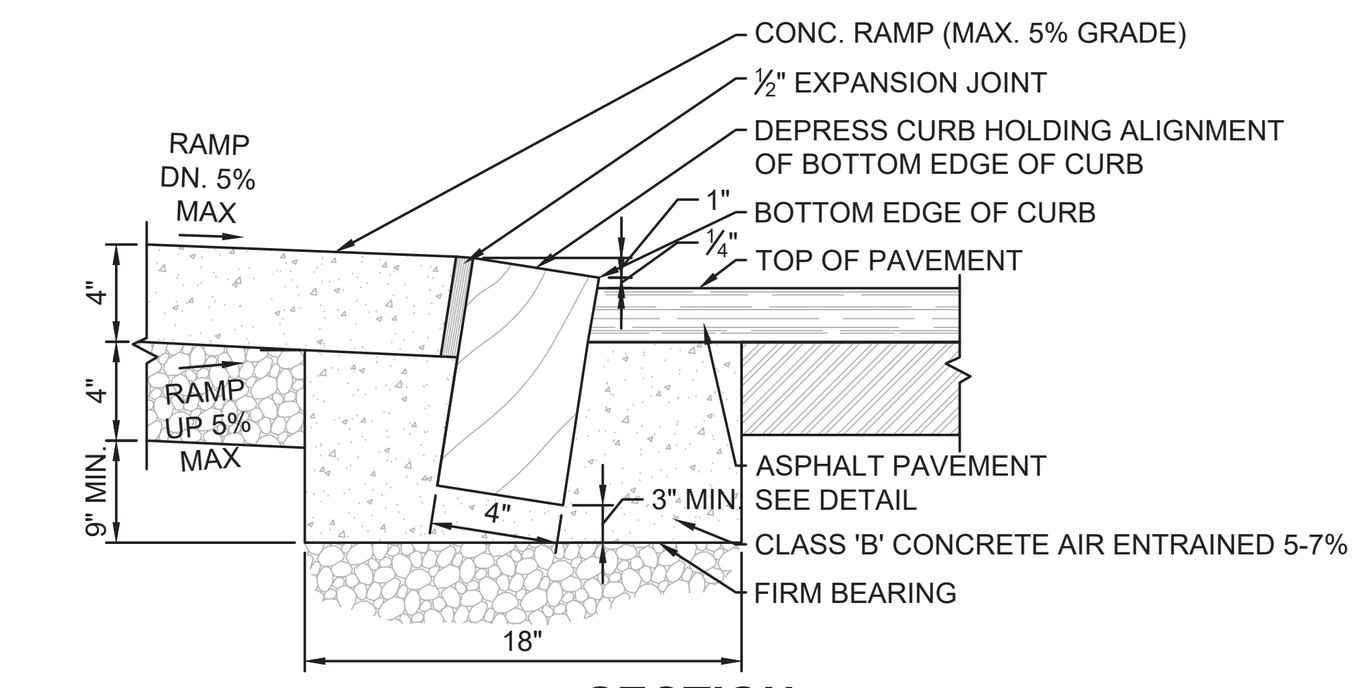

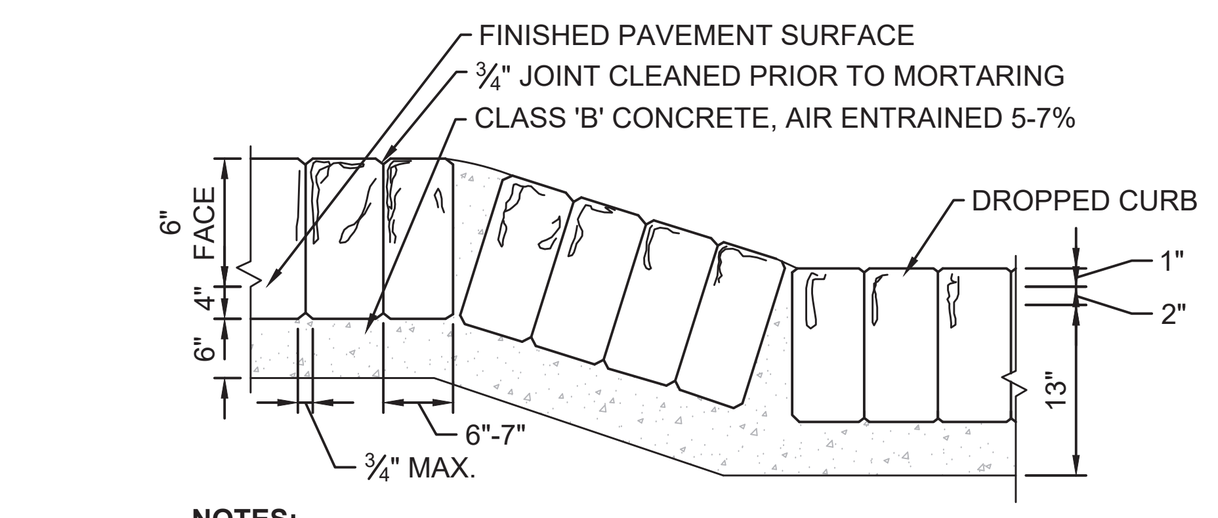

NOTES:
1. BANK RUN GRAVEL OR ¾" CLEAN STONE MAY BE REQUIRED FOR GRADE ADJUSTMENTS.
2. ALL JOINTS TO BE MORTARED USING 1 PART PORTLAND CEMENT TO 2 PARTS CLEAN MASON SAND TO 1 PART WATER (1:2:1).
3. ½" PREFORMED EXPANSION JOINT FILLER TO BE BITUMINOUS TYPE AND INSTALLED BETWEEN CURB AND CONCRETE PAVEMENT OR CONCRETE BASE COURSE WITH A DEPTH EQUAL TO THE THICKNESS OF PAVEMENT LESS ½".

3 BELGIAN BLOCK DEPRESSED CURB
SCALE: NTS

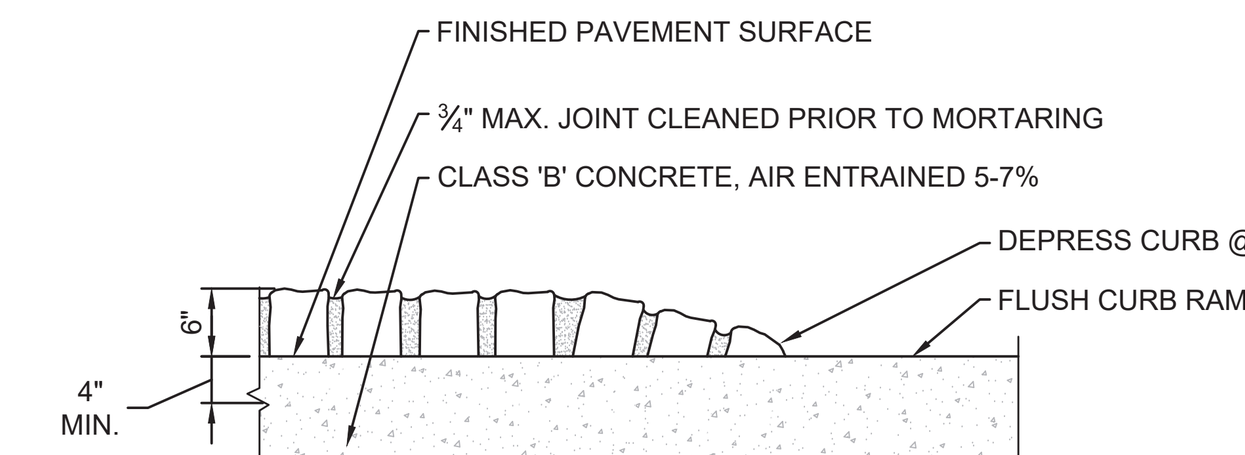

4 BELGIAN BLOCK TO FLUSH CONCRETE CURB AT ADA RAMP
SCALE: NTS

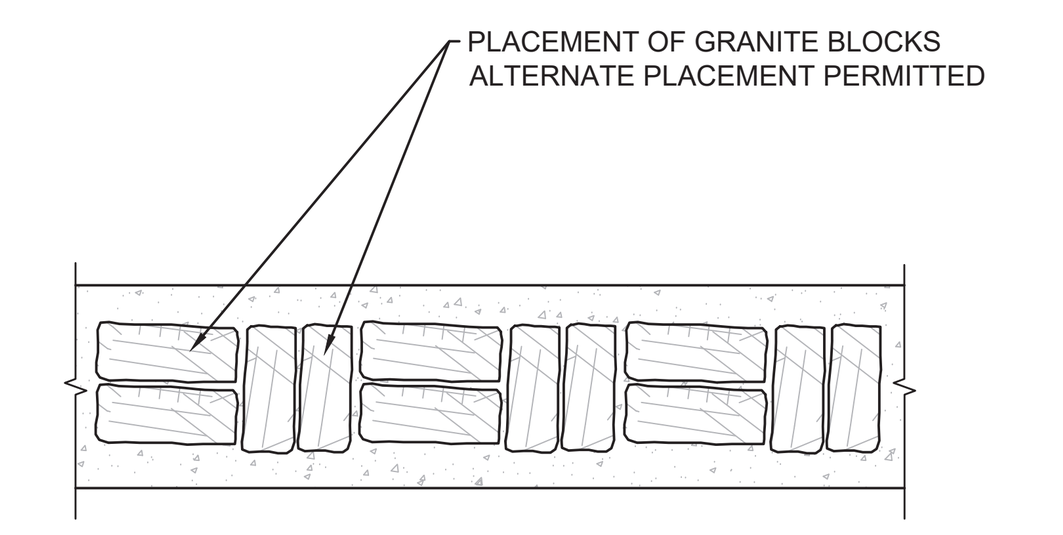

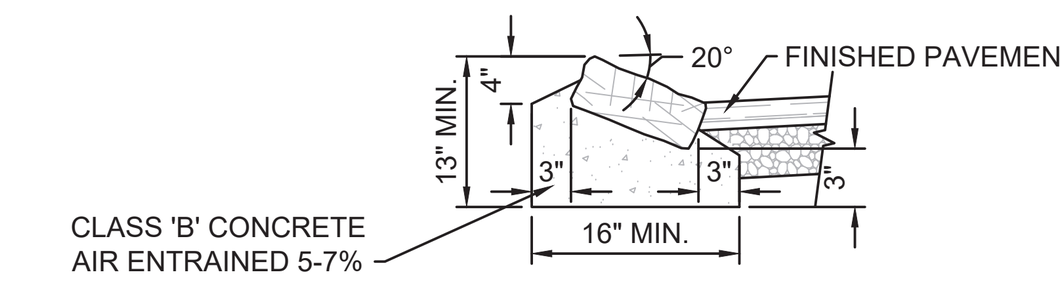

SECTION

5 MOUNTABLE BELGIAN BLOCK CURB
SCALE: NTS

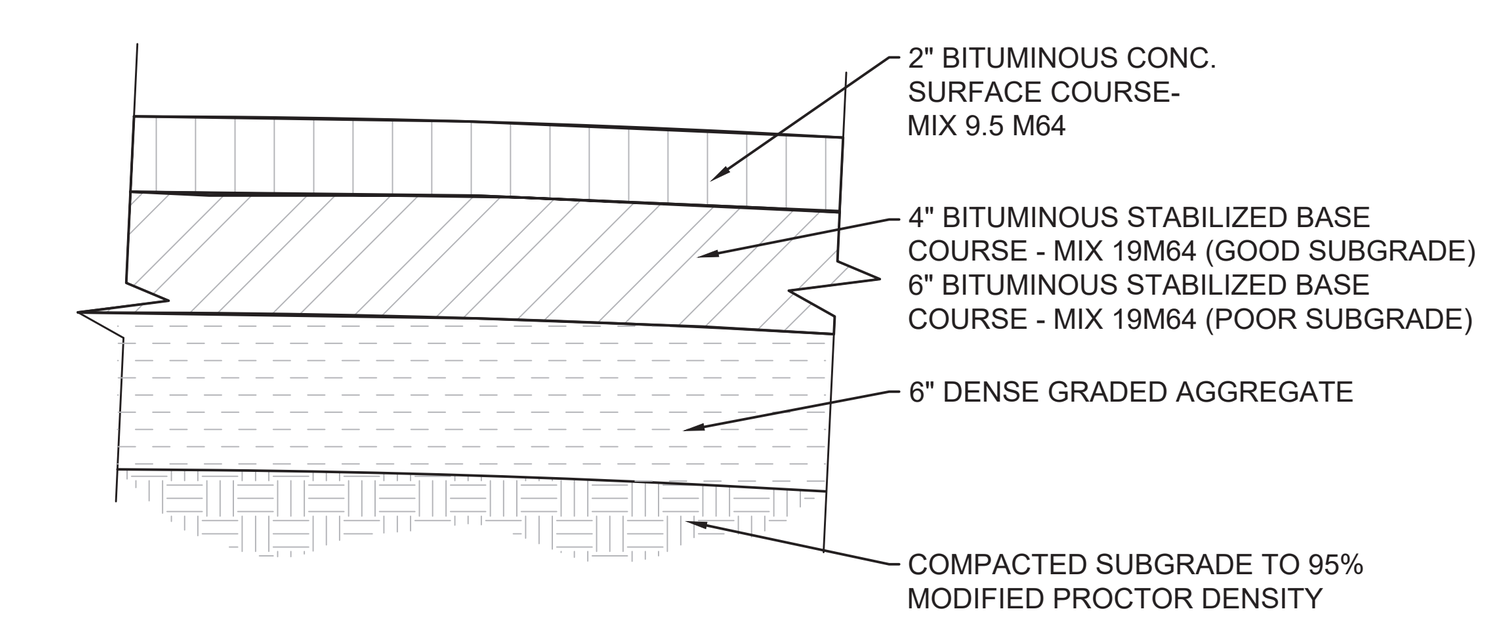

NOTES:
1. PAVEMENT SECTION MAY BE REVISED BASED ON RESULTS OF GEOTECHNICAL ANALYSIS
2. SEE GEOTECHNICAL REPORT FOR DEFINITION OF GOOD AND POOR SUBGRADE.

6 ASPHALT PAVEMENT
SCALE: NTS

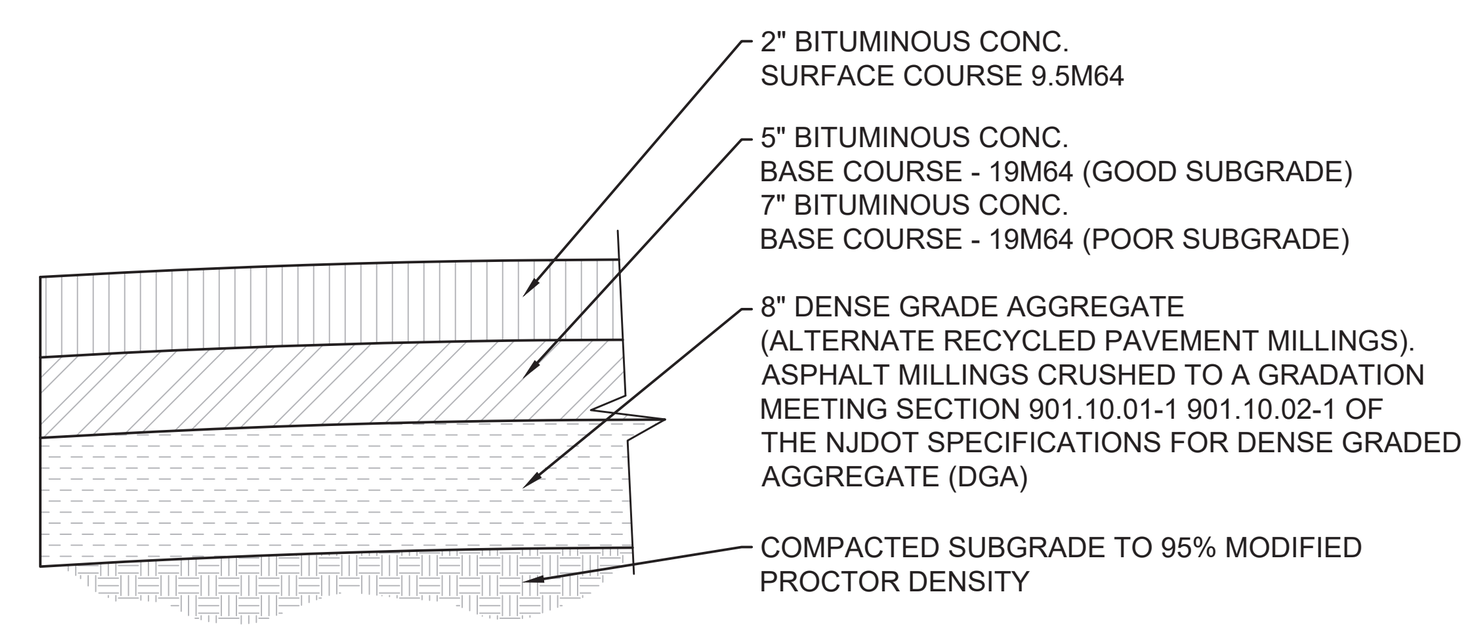

NOTES:
1. PAVEMENT SECTION MAY BE REVISED BASED ON RESULTS OF GEOTECHNICAL ANALYSIS
2. SEE GEOTECHNICAL REPORT FOR DEFINITION OF GOOD AND POOR SUBGRADE.

7 HEAVY DUTY ASPHALT PAVEMENT
SCALE: NTS

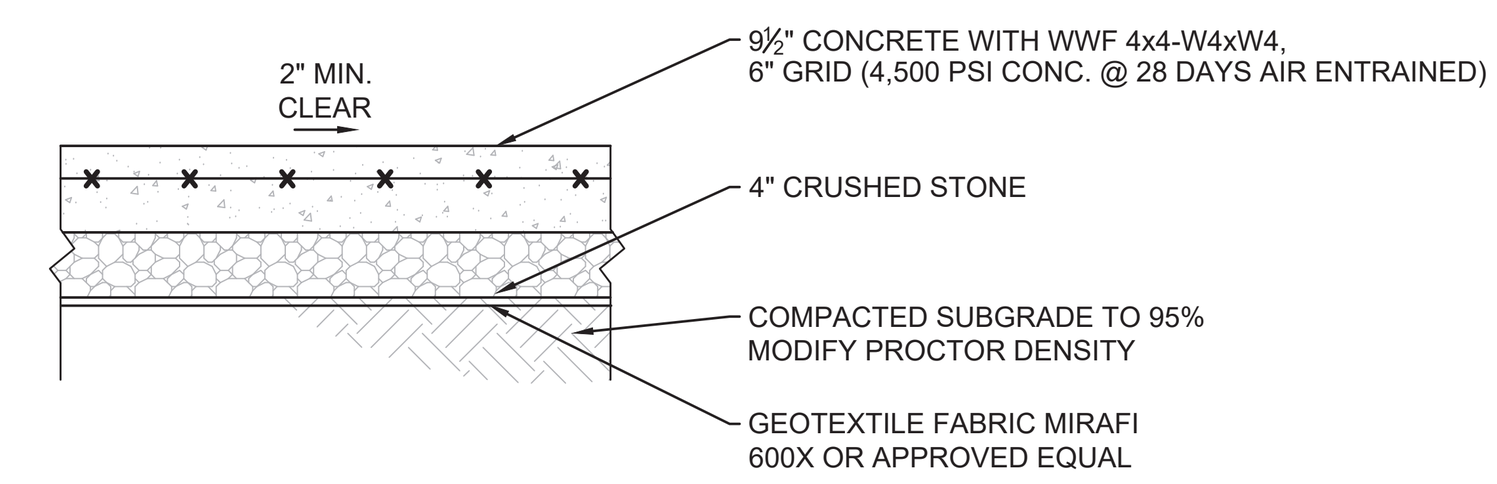

8 HEAVY DUTY CONCRETE PAVEMENT
SCALE: NTS

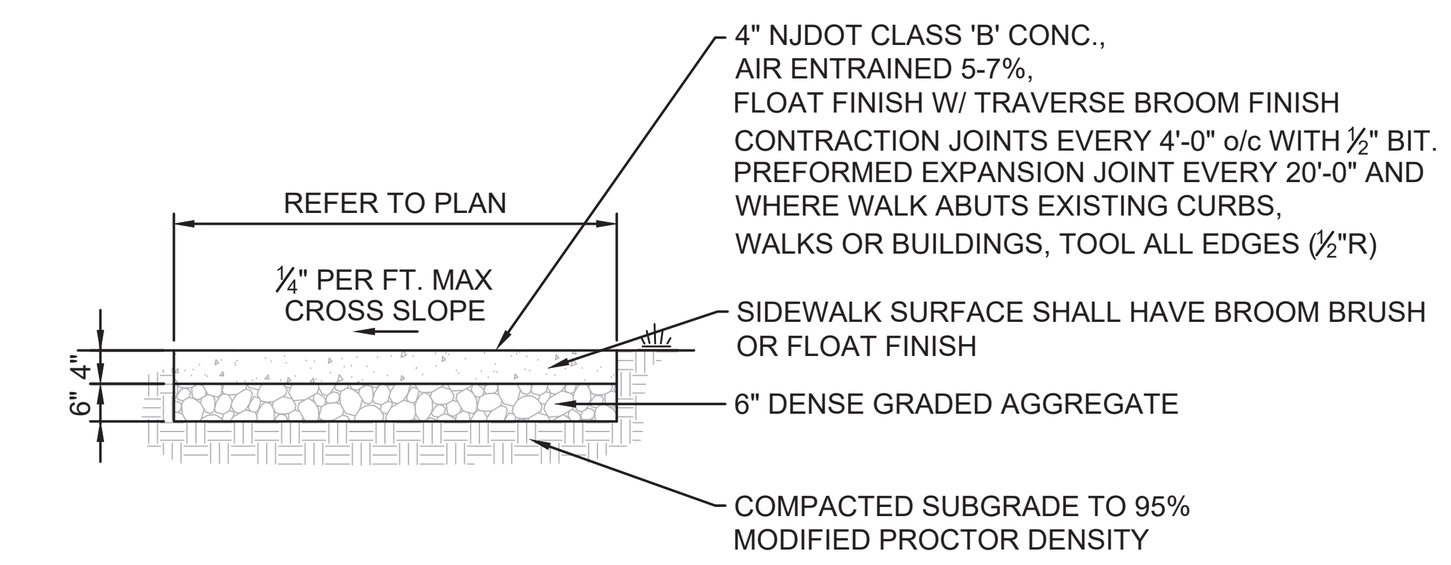

NOTE:
AT POINTS OF VEHICULAR CROSSING, WALK AND APRONS SHALL BE SIX (6) INCHES THICK WITH 6"x6" - W1.4xW1.4 WELDED WIRE FABRIC CENTERED VERTICALLY

9 CONCRETE SIDEWALK
SCALE: NTS

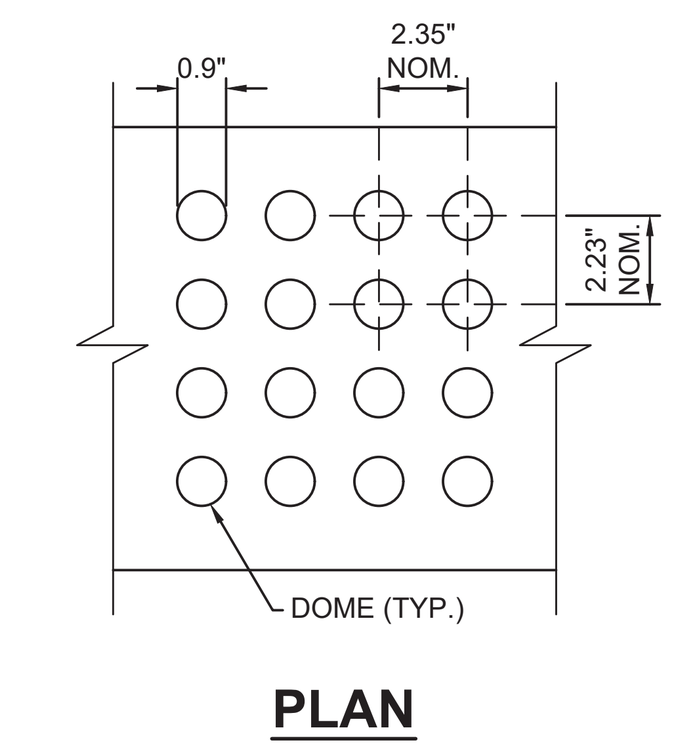

NOTES:
1. THERE SHALL BE A MINIMUM OF 70 PERCENT CONTRAST IN LIGHT REFLECTANCE BETWEEN THE DETECTABLE WARNING AND AN ADJOINING SURFACE, OR THE DETECTABLE WARNING SHALL BE "SAFETY RED". THE MATERIAL USED TO PROVIDE VISUAL CONTRAST SHALL BE AN INTEGRAL PART OF THE DETECTABLE WARNING SURFACE.
2. DOMES IN THE DETECTABLE WARNING SURFACE SHALL BE ALIGNED WITH THE DIRECTION OF TRAVEL IN ROWS, NOT SKEWED DIAGONALLY.
3. DETECTABLE WARNING SURFACE SHALL BE "ARMOR-TILE" TAC TILE SYSTEMS AS MANUFACTURED BY ENGINEERED PLASTICS INC., WILLIAMSVILLE, NEW YORK, TELEPHONE NO. 1-800-682-2525 OR APPROVED EQUAL. TACTILE TILE SIZE SHALL BE A MINIMUM OF 24"X48". COLOR SHALL BE SELECTED BY OWNER AND SHALL MEET REQUIREMENTS ABOVE. DETECTABLE WARNING SURFACES SHALL BE INSTALLED AS SHOWN IN THE PLANS, THE MANUFACTURER'S RECOMMENDATIONS AND ACCORDING TO SUGGESTION 607.06 SUBPART 5 DETECTABLE WARNING SURFACES OF THE NJDOT STANDARD SPECIFICATIONS.

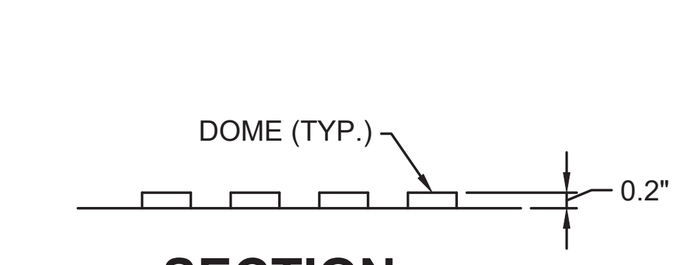

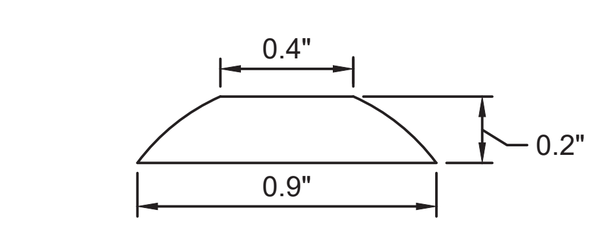

10 DETECTABLE WARNING STRIP
SCALE: NTS

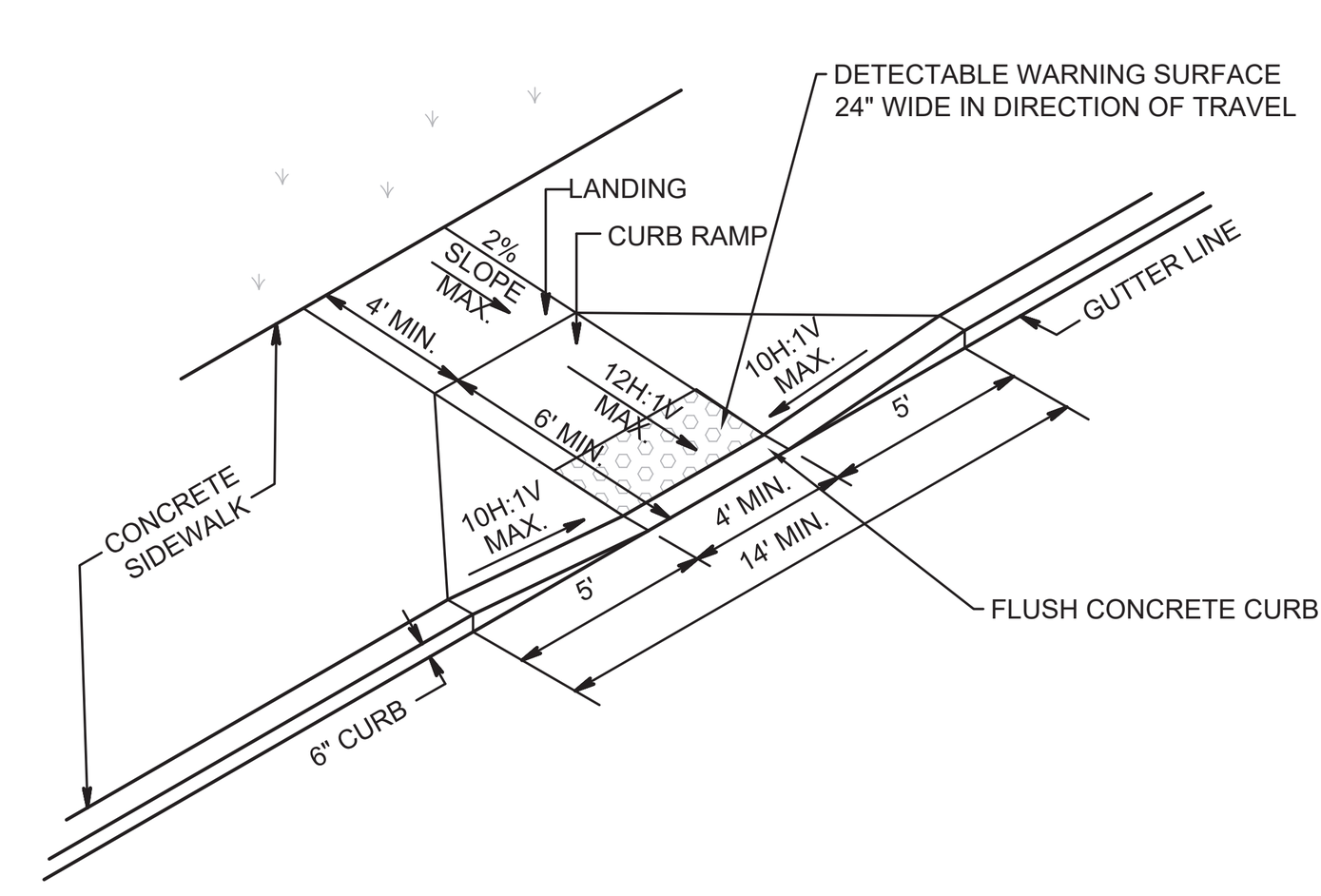

NOTES:
1. KEEP TURNING SPACE, APPROACH SIDEWALK TRANSITIONS, AND CURB RAMP CLEAR OF OBSTRUCTIONS THAT PROTRUDE ABOVE THE SIDEWALK.
2. IF A CURB RAMP IS REQUIRED, THE LOCATION OF THE DETECTABLE WARNING SURFACE MUST BE AT THE BOTTOM OF THE RAMP AND WITHIN THE REQUIRED DISTANCE FROM THE CURB.

11 ADA RAMP TYPE "1"
SCALE: NTS

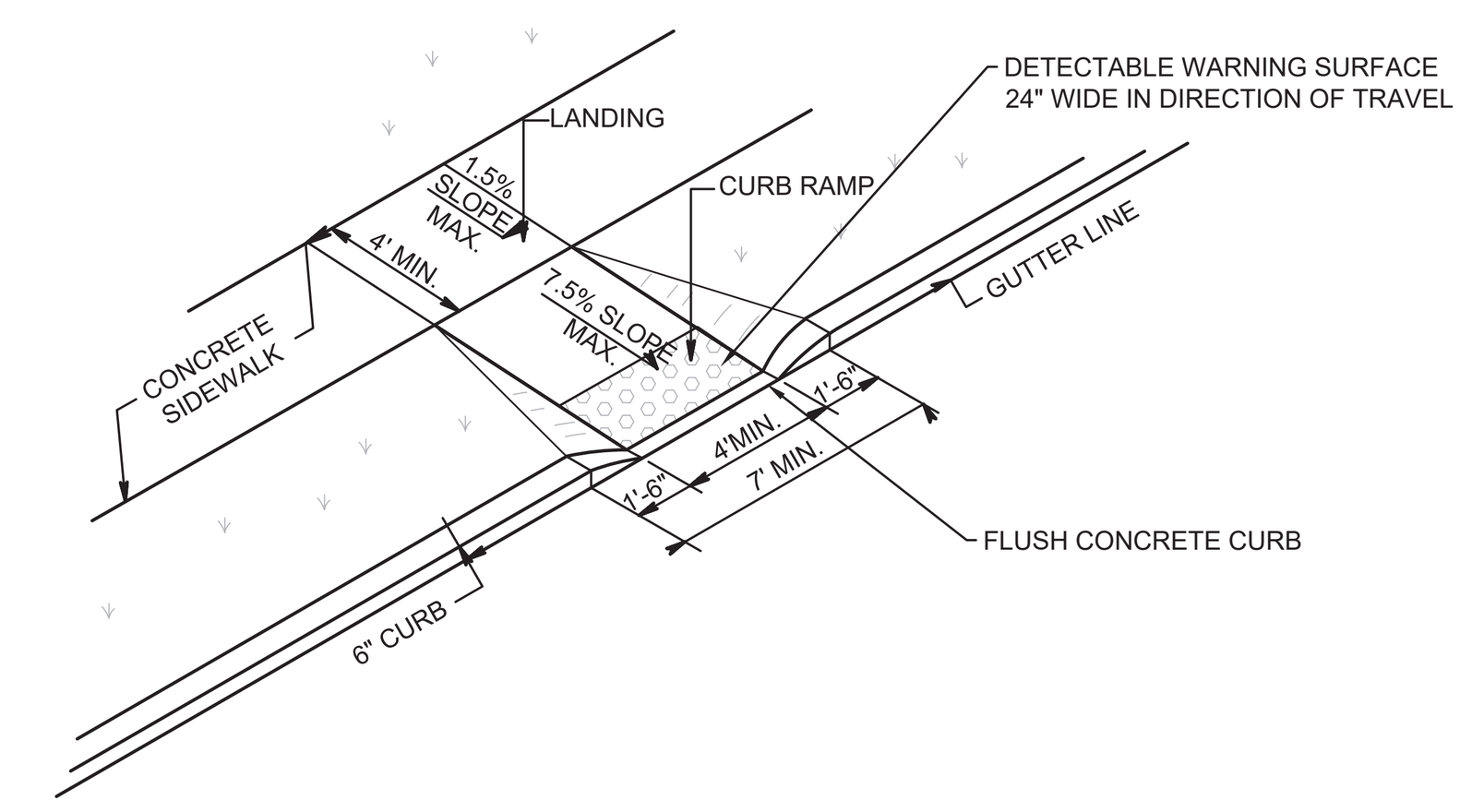

12 ADA RAMP TYPE "2"
SCALE: NTS

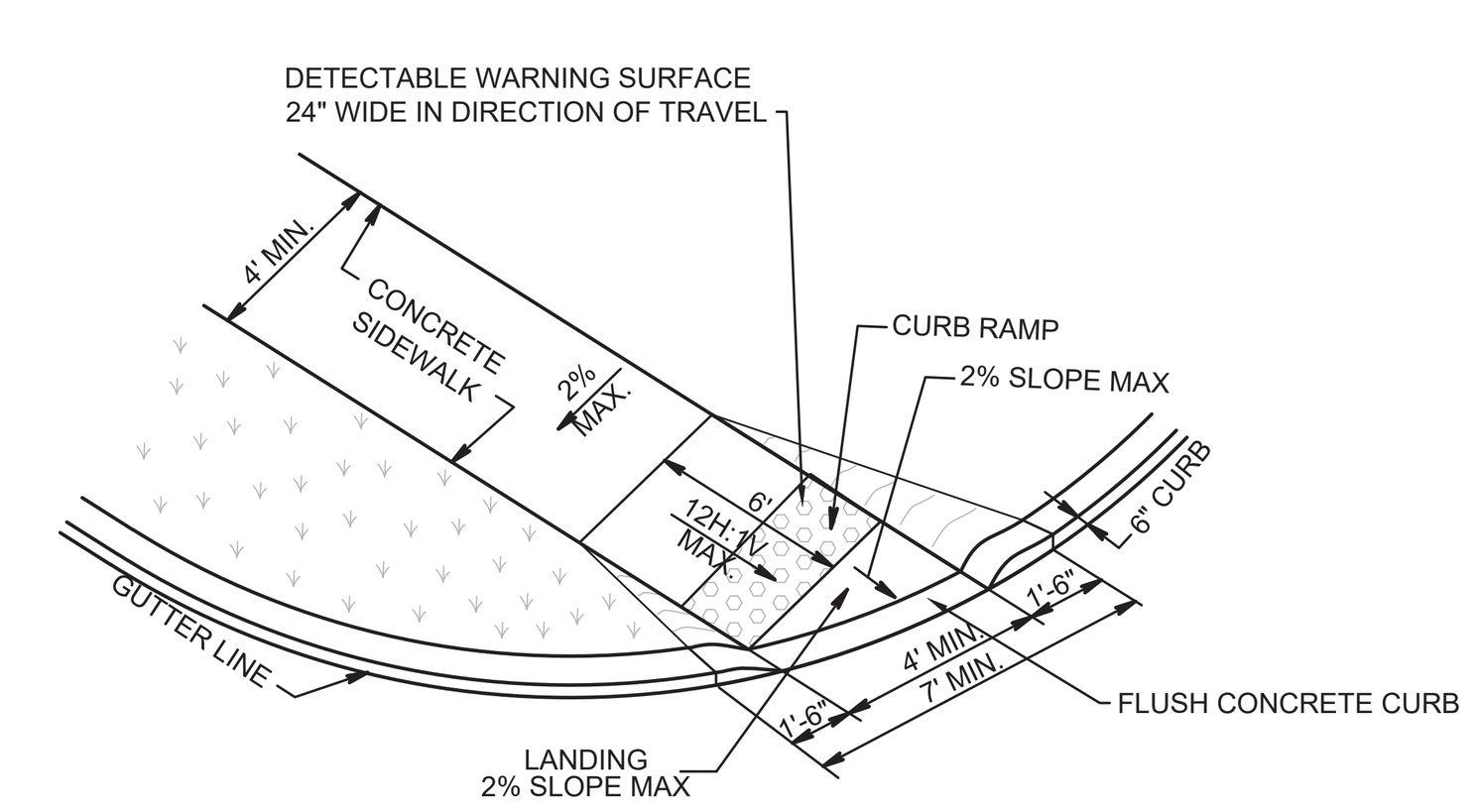

13 ADA RAMP TYPE "5"
SCALE: NTS

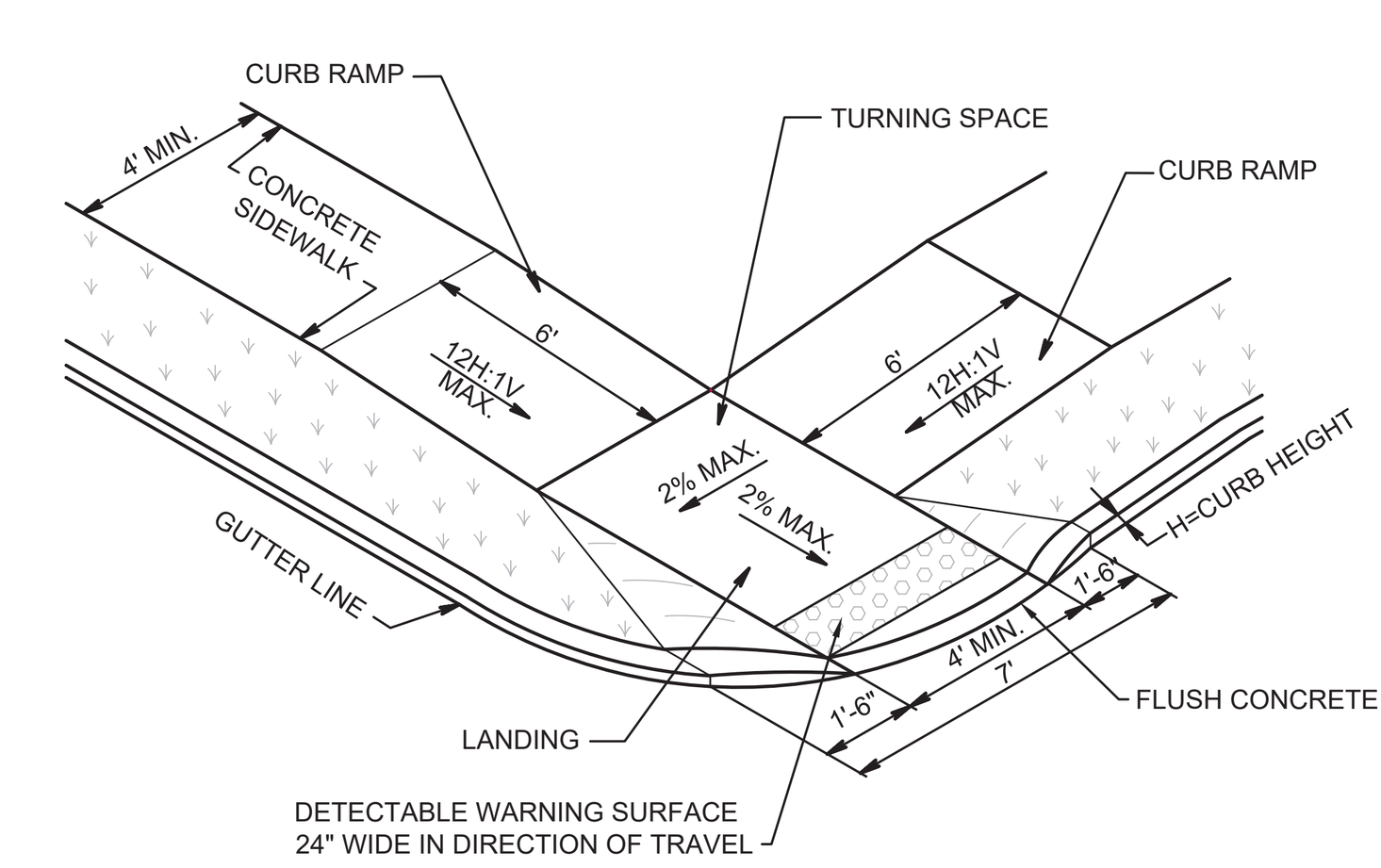

14 ADA RAMP TYPE "6"
SCALE: NTS

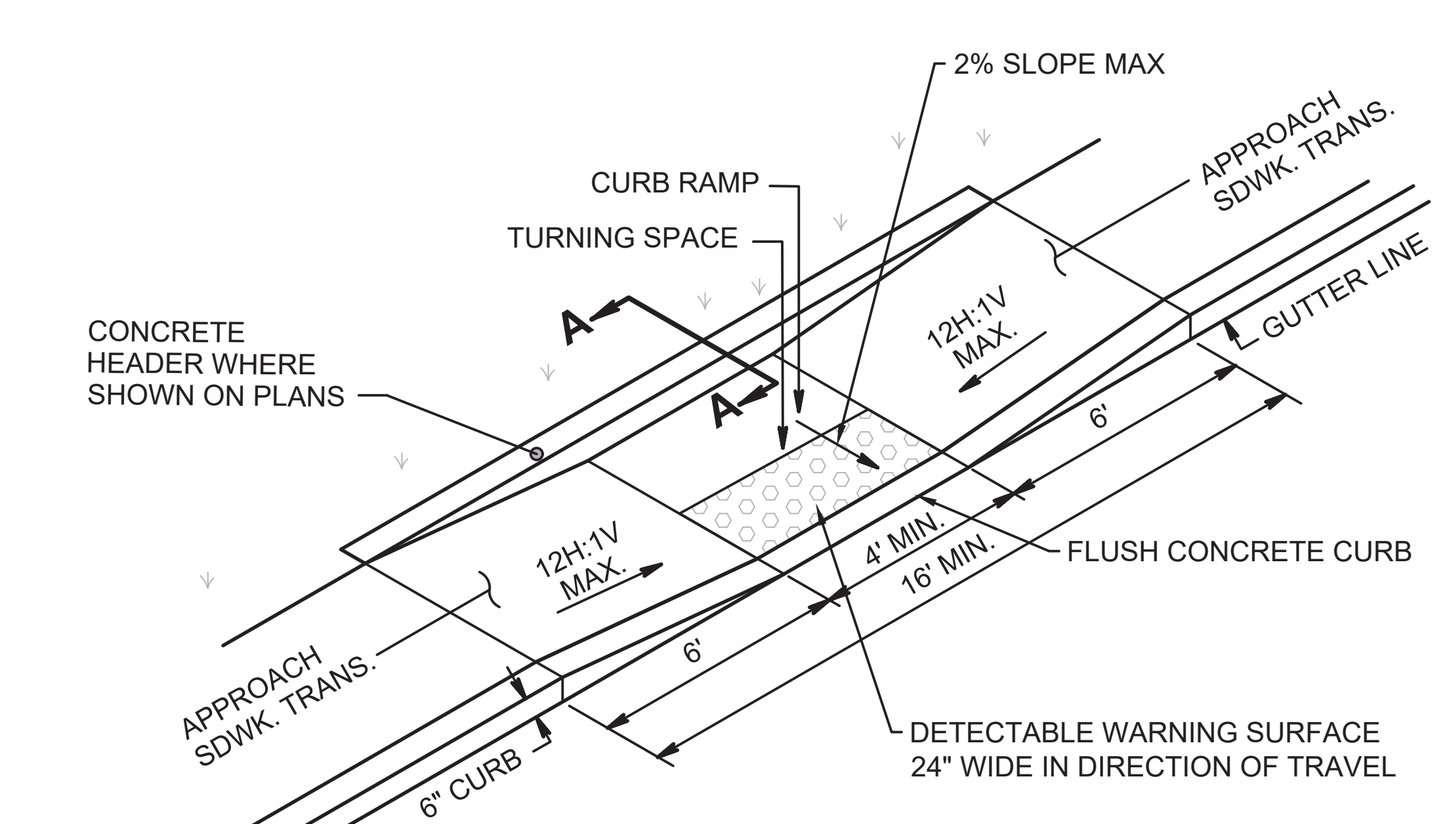

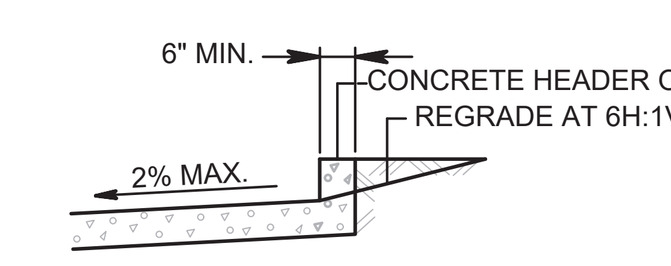

SECTION A-A

15 ADA RAMP TYPE "7"
SCALE: NTS

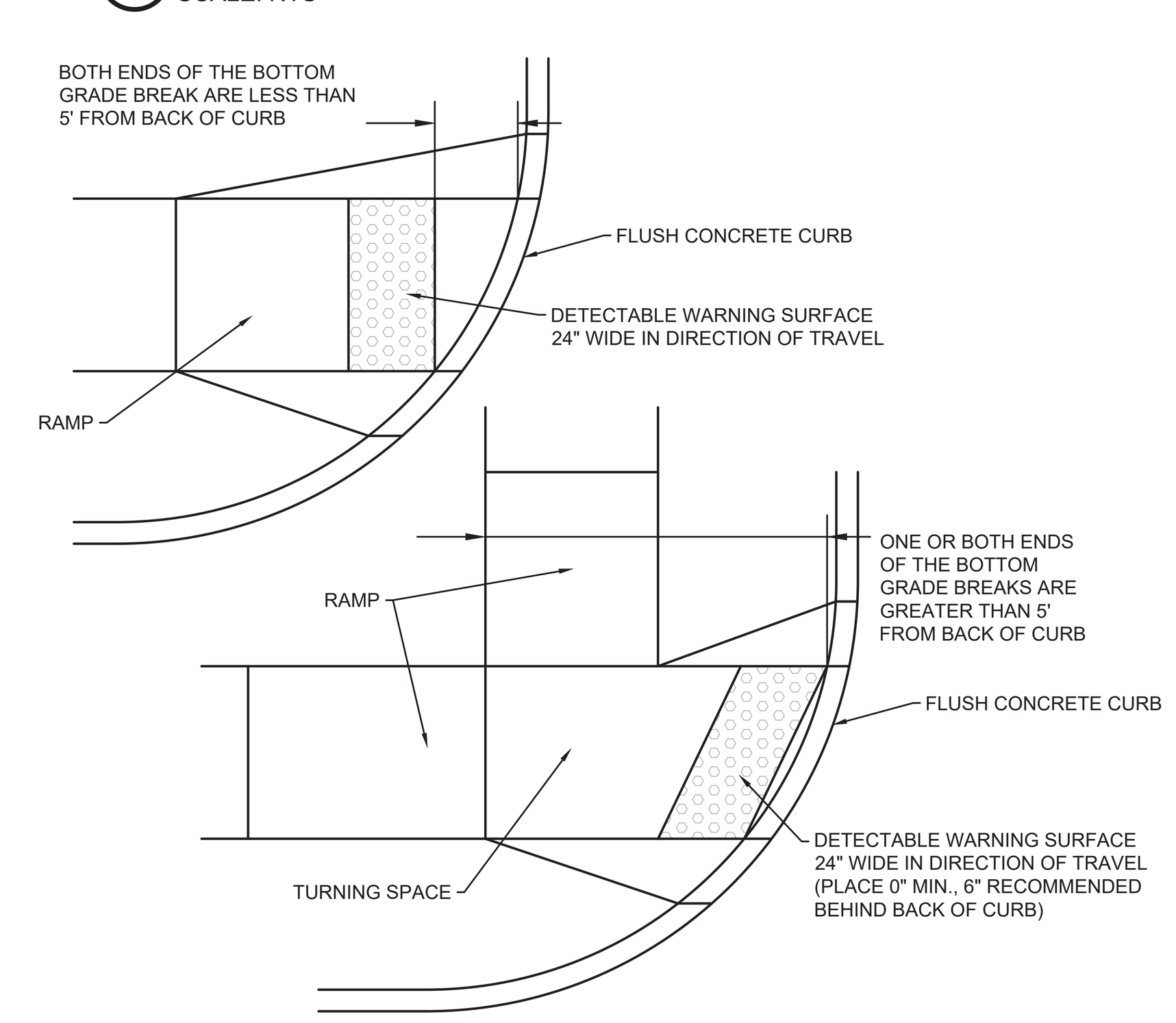

16 PLACEMENT OF DETECTABLE WARNING SURFACE FOR ADA RAMP TYPE "5" & "6"
SCALE: NTS

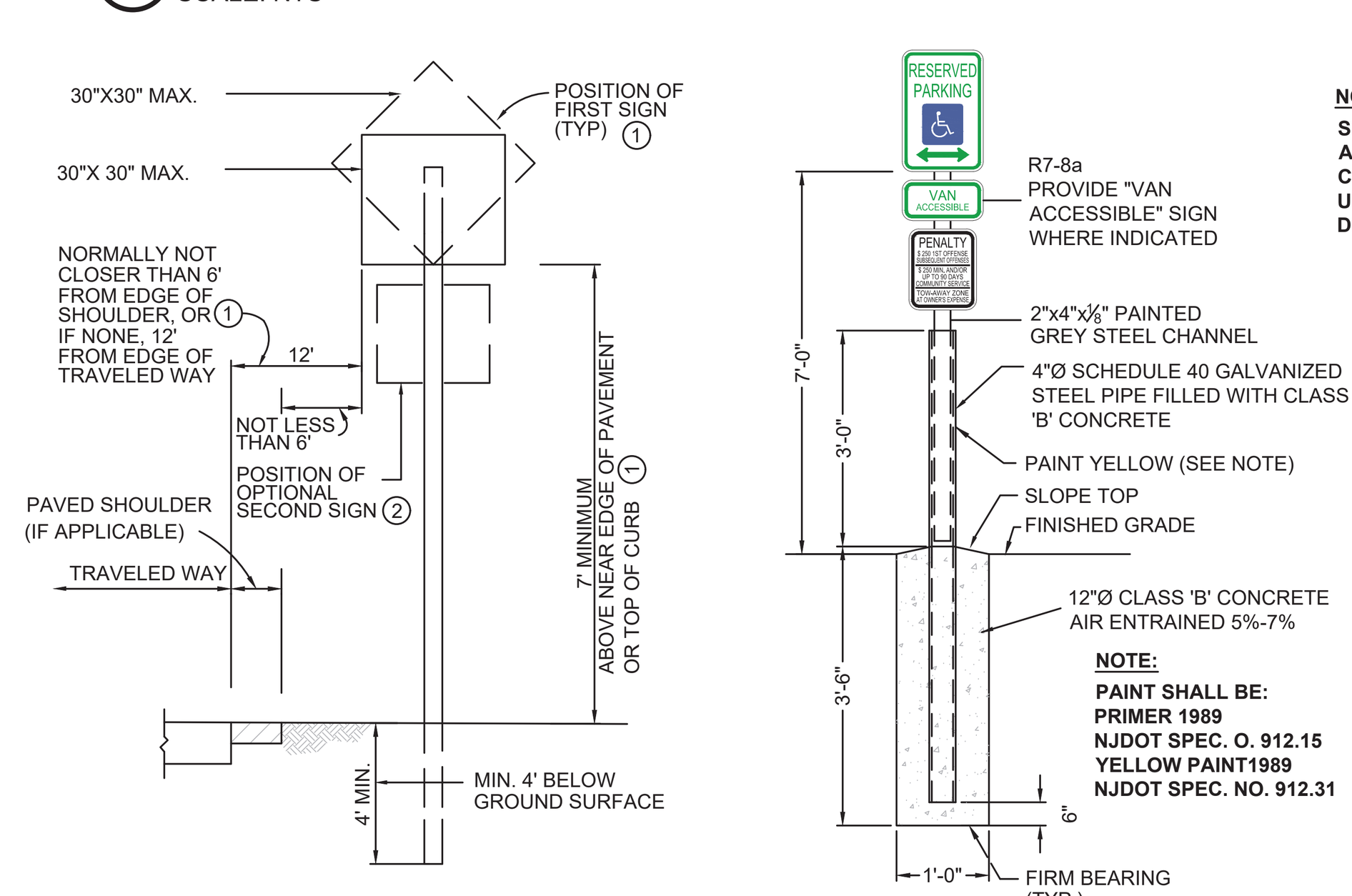

NOTE:
PAINT SHALL BE:
PRIMER 1989
NJDOT SPEC. O. 912.15
YELLOW PAINT1989
NJDOT SPEC. NO. 912.31

NOTE:
SIGNS MOUNTING HARDWARE AND SIGN POSITIONING SHALL CONFORM TO "MANUAL OF UNIFORM TRAFFIC CONTROL DEVICES" LATEST EDITION.



PAINT SHALL BE:
BACKGROUND: 3M 3930 SERIES HIGH INTENSITY PRISMATIC REFLECTIVE BLUE
LETTERING: 3M 680 SERIES REFLECTIVE WHITE
LETTERING FONT: FHWA CLEARVIEW
SIZE OF FONT TO BE COORDINATED WITH TOWNSHIP ENGINEER.

NOTES:
1. ALL SIGN PARAMETERS TO CONFORM TO THE CURRENT"MANUAL ON UNIFORM TRAFFIC CONTROL DEVICES FOR STREETS AND HIGHWAYS."
2. ALL POSTS SHALL BE OF ADEQUATE LENGTH TO MEET THE REQUIREMENTS FOR ERECTION AS STATED IN THE CURRENT "MANUAL ON UNIFORM TRAFFIC CONTROL DEVICES FOR STREETS AND HIGHWAYS"
3. ALL POSTS SHALL BE EMBEDDED 4' MINIMUM.
4. ALL STREET POSTS AND BRACKETS SHALL BE CUT, BENT AND HOLES PUNCHED AND DRILLED BEFORE GALVANIZING. GALVANIZING SHALL BE IN CONFORMANCE WITH CURRENT A.S.T.M. SPECIFICATION A123.
5. POSTS SHALL BE 2 PIECE U-POST IN CONFORMANCE WITH THE NOTES BELOW.
6. BOLTS SHALL NOT PROTRUDE MORE THAN 1/2" BEYOND THE NUT WHEN TIGHT, BUT SHALL ENGAGE ALL THREADS IN THE NUT.
7. IN AREAS WHERE GROUND MOUNTED SIGN SUPPORTS CANNOT BE SUFFICIENTLY OFFSET FROM THE PAVEMENT EDGE, SIGN SUPPORTS SHOULD BE OF A SUITABLE BREAKAWAY OR YIELDING DESIGN. (SEE N.J.D.O.T. MANUAL).
8. THE HEIGHT TO THE BOTTOM OF A SECONDARY SIGN MOUNTED BELOW ANOTHER SIGN MAY BE 1' LESS THAN THE APPROPRIATE HEIGHT SPECIFIED.

17 SITE SIGNAGE
SCALE: NTS

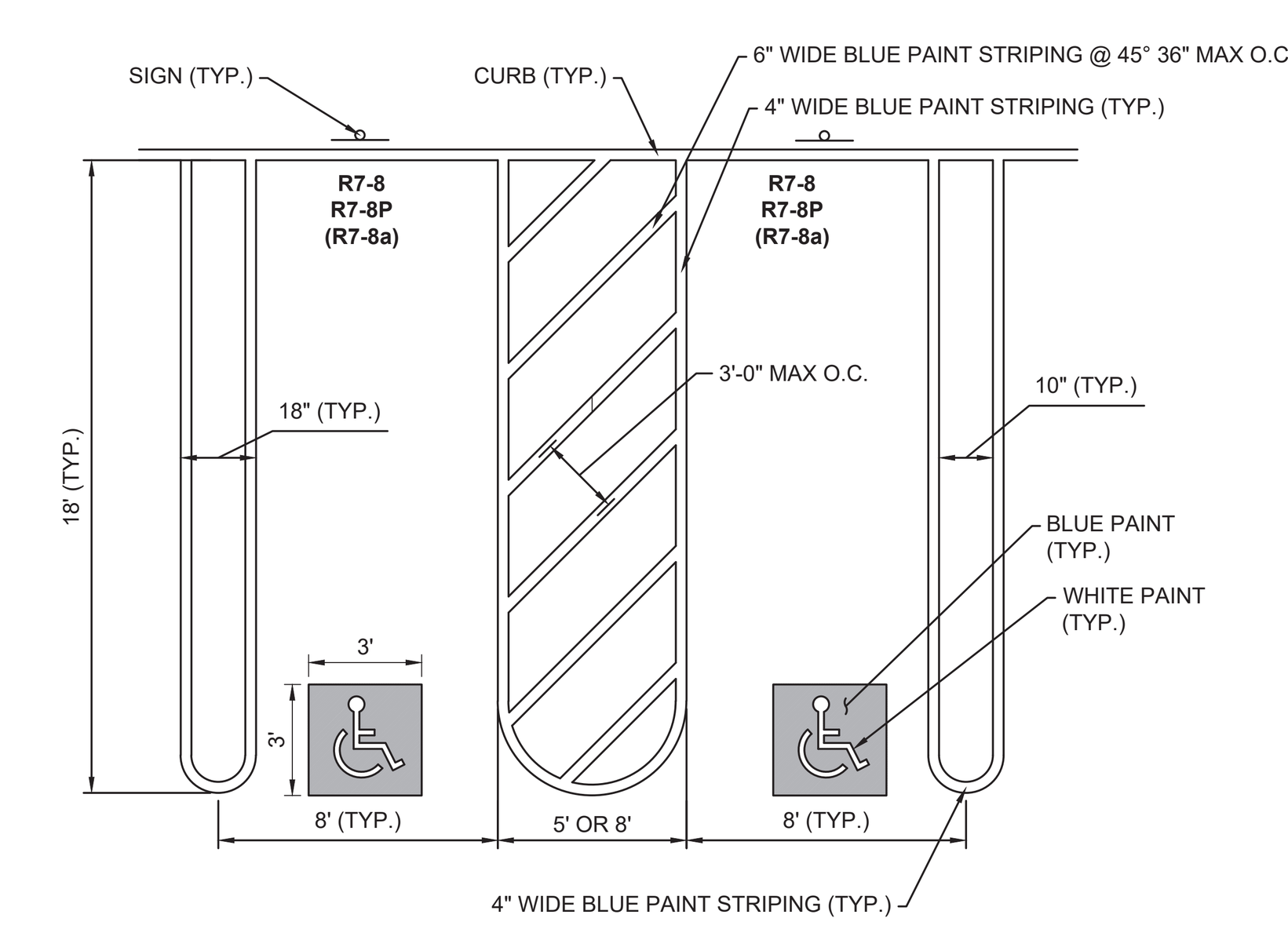

NOTES:
1. ADA PARKING STALLS SHALL BE 8'-0" WIDE WITH A 5'-0" ACCESS AISLE
2. VAN ACCESSIBLE SPACES SHALL BE 8'-0" WIDE WITH 8'-0" ACCESS AISLE

18 HAIRPIN STRIPING ADA STALL
SCALE: NTS

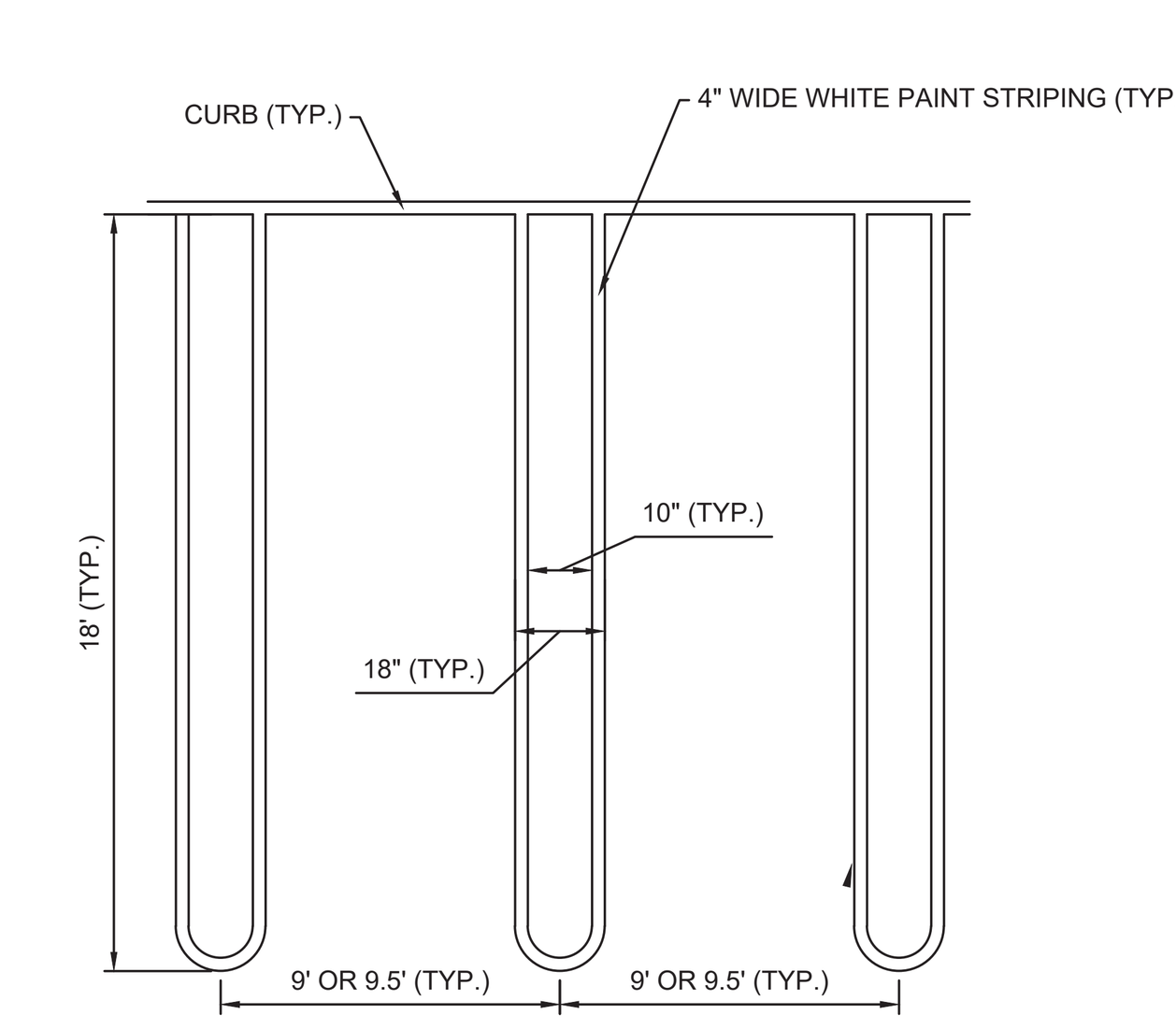

19 HAIRPIN STRIPING PARKING STALL
SCALE: NTS

CONSULTANT

ORIENTATION / KEY PLAN

PAULUS, SOKOLOWSKI AND SARTOR, LLC
67A MOUNTAIN BLVD EXT.
P.O. BOX 4039
WARREN, NEW JERSEY 07059
PHONE: (732) 560-9700

CERTIFICATE OF AUTHORIZATION NO. 24GA28032700

ALL DIMENSIONS MUST BE VERIFIED BY THE CONTRACTOR. NOTIFY PAULUS, SOKOLOWSKI AND SARTOR, LLC. OF ANY CONFLICTS, ERRORS, AMBIGUITIES OR DISCREPANCIES IN THE CONTRACT DRAWINGS OR SPECIFICATIONS BEFORE PROCEEDING WITH CONSTRUCTION.

ALL DIMENSIONS SHALL BE AS NOTED IN WORDS OR NUMBERS ON THE CONTRACT DRAWINGS. DO NOT SCALE THE DRAWINGS TO DETERMINE DIMENSIONS.

THESE CONTRACT DRAWINGS CONTAIN DATA INTENDED SPECIFICALLY FOR THE NOTED PROJECT AND CLIENT. THEY ARE NOT INTENDED FOR USE ON EXTENSIONS OF THIS PROJECT OR FOR REUSE ON ANY OTHER PROJECT.

THE COPYING AND/OR MODIFICATION OF THIS DOCUMENT OR ANY PORTION THEREOF WITHOUT THE WRITTEN PERMISSION OF PAULUS, SOKOLOWSKI AND SARTOR, LLC. IS PROHIBITED.

UNLESS THESE DRAWINGS ARE SPECIFICALLY DESIGNATED AS "CONSTRUCTION ISSUE", THESE DRAWINGS SHALL NOT BE USED FOR CONSTRUCTION OR IMPROVEMENTS DEPICTED HEREIN. CONTRACTORS SHALL NOTIFY THE DESIGN ENGINEER TO OBTAIN CONSTRUCTION DOCUMENTS.

COPYRIGHT 2019 PAULUS, SOKOLOWSKI AND SARTOR, LLC. – ALL RIGHTS RESERVED.



1/7/2019

CLIENT

PROJECT
NEW JERSEY CENTER OF EXCELLENCE
1041 N.J.S.H. ROUTE 202/206
BLOCK 483, LOTS 17, 18 & 19

TOWNSHIP OF BRIDGEWATER
SOMERSET COUNTY, NEW JERSEY 08807

SHEET TITLE
SITE DETAILS (SHEET 1 OF 2)

JOB NO.:	00488.0041
DATE:	05/09/2018
DRAWN:	TB/CY
CHECK:	CH/LAD
SCALE:	N.T.S.

SHEET NO. 20 OF 75

C-20

FILE NAME: P:\00488\0041\DWGs\C-Civil\Plotdwgs\C-20-XX DETAILS.dwg \ C-20 LAST EDIT: 01/07/2019 - 02:18:16 PM LOGIN: tberninger@

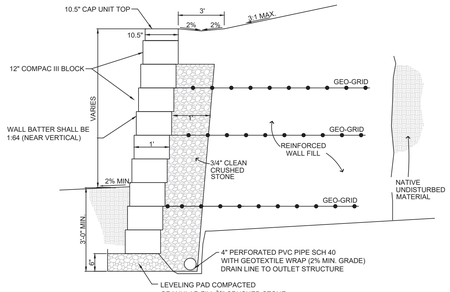

NOTES:
1. **FOR ALL WALL 4' HIGH OR HIGHER, DETAILED SIGNED AND SEALED SHOP DRAWINGS BY NJ LICENSED PE INCLUDING ENGINEERING CALCULATIONS FOR WALL STABILITY TO BE PROVIDED WITH SHOP DRAWINGS. CALCULATIONS SHALL INCLUDE GLOBAL STABILITY ANALYSIS. SHOP DRAWINGS MUST INCLUDE: LOCATION OF PERFORATED TUBING AND CONNECTION TO DRAINAGE STRUCTURE; DETAIL OF HOW PIPES ARE TO BE INSTALLED THROUGH THE WALL; LOCATION OF ALL UTILITIES LOCATED BEHIND WALL.**
2. **FOR ALL WALLS UNDER 4' HIGH, WALL AND REINFORCEMENT TO BE INSTALLED AS PER MANUFACTURER REQUIREMENTS.**
3. **CONTRACTOR MUST COORDINATE LOCATION OF ALL UTILITIES WITHIN CLOSE PROXIMITY TO RETAINING WALLS.**
4. **CONTRACTOR SHALL SUBMIT SHOP DRAWINGS WITH GUIDE RAIL INSTALLATION FOR REVIEW AND APPROVAL.**
5. **COLOR, TEXTURE AND PATTERN WILL BE PROVIDED AT TIME OF CONSTRUCTION.**

1 MODULAR BLOCK RETAINING WALL
SCALE: NTS

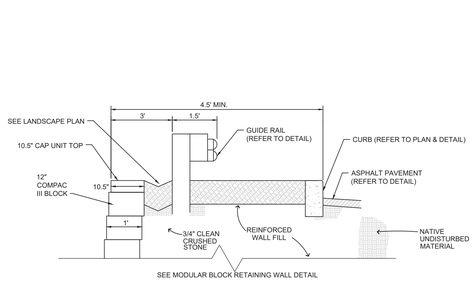

2 MODULAR BLOCK RETAINING WALL WITH GUIDE RAIL
SCALE: NTS

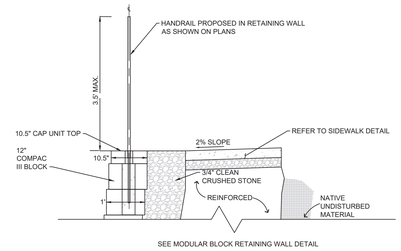

3 MODULAR BLOCK RETAINING WALL WITH HANDRAIL
SCALE: NTS



PROPOSED NEW FENCE TO MATCH EXISTING (TO BE INSTALLED AS NECESSARY IN LIEU OF EXISTING FENCE

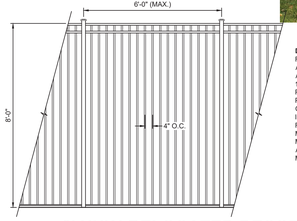

DECORATIVE FENCE
FINAL DETAILS AND MATERIAL TO MATCH EXISTING FENCE ALONG 202/206
AS MFG. BY: CLEMS ORNAMENTAL IRON WORK
110 ELEVENTH STREET
PISCATAWAY, NJ 08902
P. 732.968.7200
COLOR: BLACK
INSTALL PER MANUFACTURES RECOMMENDATIONS
FENCE POSTS SHALL BE SET IN CONCRETE FOOTINGS AT A MIN. OF 36" DEPTH FOR ALL ON GRADE APPLICATIONS. WALL MOUNTED FENCE SHALL BE CORE DRILLED INTO WALL CAPS AND CAP SHALL BE FILLED WITH NON SHRINKING GROUT TO MATCH CAP COLOR.

4 8' HIGH RELOCATED DECORATIVE FENCE
SCALE: NTS

NOTE:
THIS BACK-UP PLATE IS PLACED BEHIND RAIL ELEMENTS AT INTERMEDIATE STEEL POSTS (NON-SPsplice POSTS).

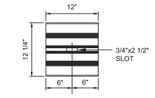

BACK-UP PLATE

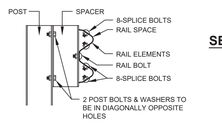

BEAM GUIDE RAIL POST ASSEMBLY



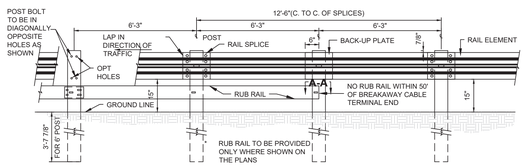

5 BEAM GUIDE RAIL
SCALE: NTS

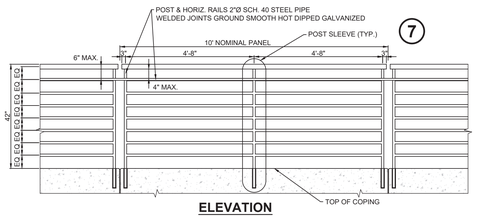

ELEVATION

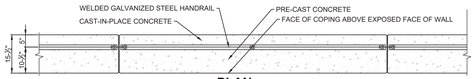

PLAN

NOTE:
REQUIRED IN ALL LOCATIONS WHERE EXPOSED FACE OF BLOCK EXCEEDS 30"

6 HANDRAIL AT TOP OF MODULAR BLOCK RETAINING WALL
SCALE: NTS

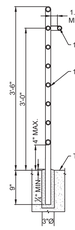

7 POST SLEEVE
SCALE: NTS

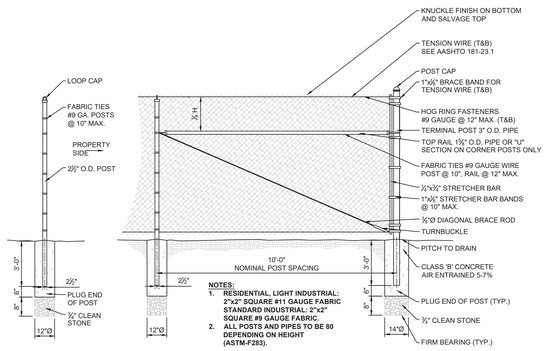

NOTES:
1. **RESIDENTIAL, LIGHT INDUSTRIAL: 2"x2" SQUARE #11 GAUGE FABRIC STANDARD INDUSTRIAL: 2"x2" SQUARE #9 GAUGE FABRIC.**
2. **ALL POSTS AND PIPES TO BE 80 DEPENDING ON HEIGHT (ASTM-F283).**

8 8' HIGH BLACK VINYL CHAIN LINK FENCE
SCALE: NTS

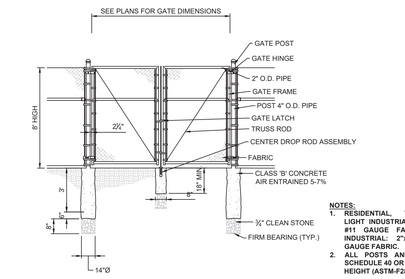

NOTES:
1. **RESIDENTIAL, TENNIS COURT, LIGHT INDUSTRIAL: 2"x2" SQUARE #11 GAUGE FABRIC STANDARD INDUSTRIAL: 2"x2" SQUARE #9 GAUGE FABRIC.**
2. **ALL POSTS AND PIPES TO BE SCHEDULE 40 OR 80 DEPENDING ON HEIGHT (ASTM-F283).**

9 8' HIGH DOUBLE SWING GATE
SCALE: NTS

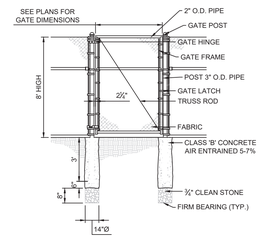

NOTES:
1. **RESIDENTIAL, TENNIS COURT, LIGHT INDUSTRIAL: 2"x2" SQUARE #11 GAUGE FABRIC STANDARD INDUSTRIAL: 2"x2" SQUARE #9 GAUGE FABRIC.**
2. **ALL POSTS AND PIPES TO BE SCHEDULE 40 OR 80 DEPENDING ON HEIGHT (ASTM-F283).**

10 8' HIGH SINGLE GATE
SCALE: NTS

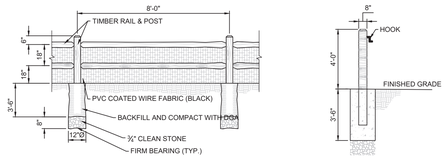

NOTE:
1. **SEE SITE PLAN FOR LOCATION**
2. **WESTERN RED CEDAR STAINED NATURAL OR DARK BROWN AS PER OWNER, ALL HARDWARE PAINTED BLACK**
3. **TENSION WIRE TO CONFORM WITH AASHTO 181-23.1**

HITCHBACK POST

11 SPLIT RAIL FENCE AROUND BASIN
SCALE: NTS

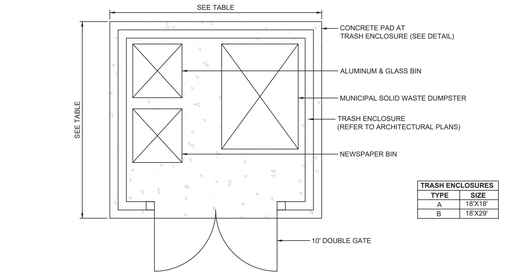

TRASH ENCLOSURES	
TYPE	SIZE
A	18'X16'
B	18'X29'

12 TRASH AND RECYCLING ENCLOSURE
SCALE: NTS

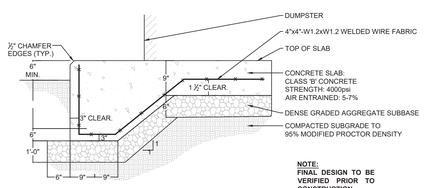

NOTE:
FINAL DESIGN TO BE VERIFIED PRIOR TO CONSTRUCTION

13 CONCRETE PAD AT TRASH AND RECYCLING ENCLOSURE
SCALE: NTS

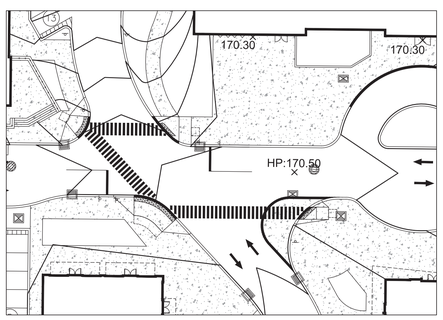

14 BOULEVARD AND FOUNDRY LANE INTERSECTION PLAN
SCALE: NTS

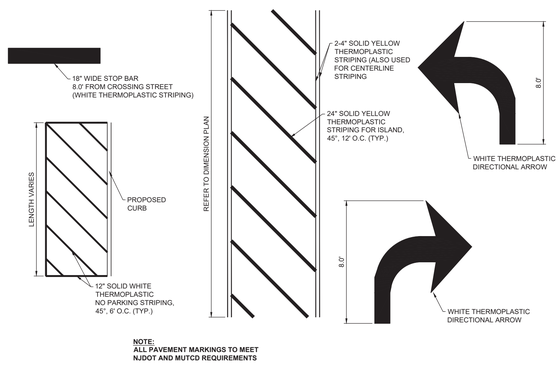

NOTE:
ALL PAVEMENT MARKINGS TO MEET NJDOT AND MUTCD REQUIREMENTS

15 PAVEMENT MARKINGS
SCALE: NTS

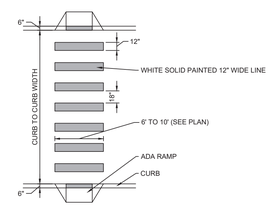

16 CROSSWALK
SCALE: NTS

REV. / ISSUE	DATE	DESCRIPTION
1	11/12/18	REVISED PER BOARD COMMENTS
2	1/07/19	REVISED PER BOARD COMMENTS

CONSULTANT

ORIENTATION / KEY PLAN

PAULUS, SOKOLOWSKI AND SARTOR, LLC

67A MOUNTAIN BLVD EXT.
P.O. BOX 4039
WARREN, NEW JERSEY 07059
PHONE: (732) 560-9700

CERTIFICATE OF AUTHORIZATION NO. 24GA28032700

ALL DIMENSIONS MUST BE VERIFIED BY THE CONTRACTOR. NOTIFY PAULUS, SOKOLOWSKI AND SARTOR, LLC OF ANY CONFLICTS OR DISCREPANCIES INDICATED IN THE CONTRACT DRAWINGS OR SPECIFICATIONS BEFORE PROCEEDING WITH CONSTRUCTION.

ALL DIMENSIONS SHALL BE, AS NOTED IN WORDS OR NUMBERS, ON THE CONTRACT DRAWINGS. DO NOT SCALE THE DRAWINGS TO DETERMINE DIMENSIONS.

THESE CONTRACT DRAWINGS CONTAIN DATA INTENDED SPECIFICALLY FOR THE NOTED PROJECT AND CLIENT. THEY ARE NOT INTENDED FOR USE ON EXTENSIONS OF THIS PROJECT OR FOR REUSE ON ANY OTHER PROJECT.

THE COPYING AND/OR MODIFICATION OF THIS DOCUMENT OR ANY PORTION THEREOF WITHOUT THE WRITTEN PERMISSION OF PAULUS, SOKOLOWSKI AND SARTOR, LLC IS PROHIBITED.

UNLESS THESE DRAWINGS ARE SPECIFICALLY DESIGNATED AS "CONSTRUCTION ISSUE", THESE DRAWINGS SHALL NOT BE USED FOR CONSTRUCTION OR IMPROVEMENTS DEPICTED HEREIN. CONTRACTORS SHALL NOTIFY THE DESIGN ENGINEER TO OBTAIN CONSTRUCTION DOCUMENTS.

COPYRIGHT 2019 PAULUS, SOKOLOWSKI AND SARTOR, LLC – ALL RIGHTS RESERVED.



1/7/2019

CLIENT

PROJECT

NEW JERSEY
CENTER OF EXCELLENCE

1041 N.J.S.H. ROUTE 202/206
BLOCK 483, LOTS 17, 18 & 19

TOWNSHIP OF BRIDGEWATER
SOMERSET COUNTY, NEW JERSEY 08807

SHEET TITLE

SITE DETAILS
(SHEET 2 OF 2)

JOB NO.:	00488.0041
DATE:	05/09/2018
DRAWN:	TB/CY
CHECK:	CH/LAD
SCALE:	N.T.S.

SHEET NO. 21 OF 75

C-21

FILE NAME: P:\00488\00\TOPO\SC\Civil\Dwg\SC-DETAILS.dwg CS-1 LAST EDIT: 1/07/2019 - 03:18:51 PM LOGIN: tbenedetto

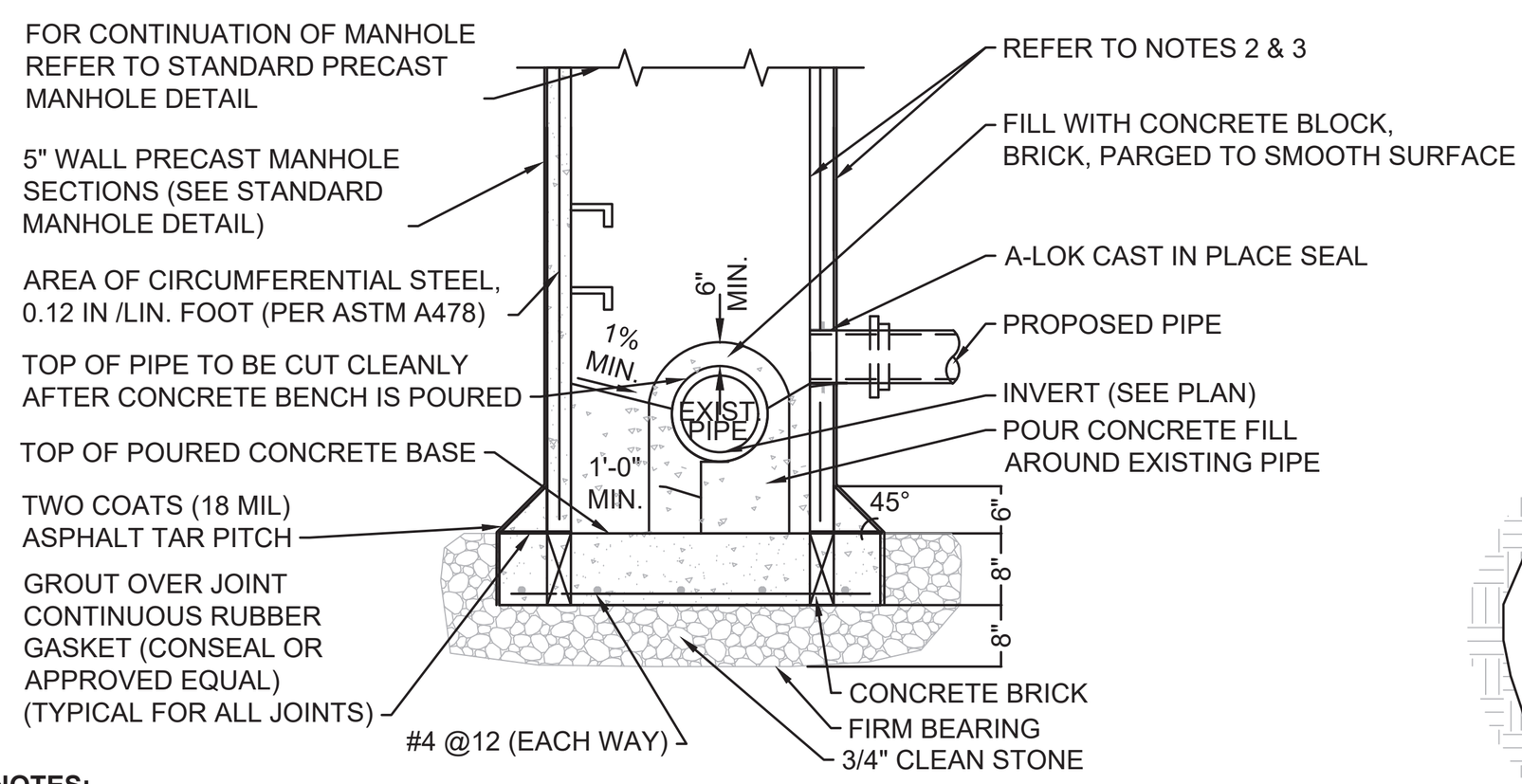

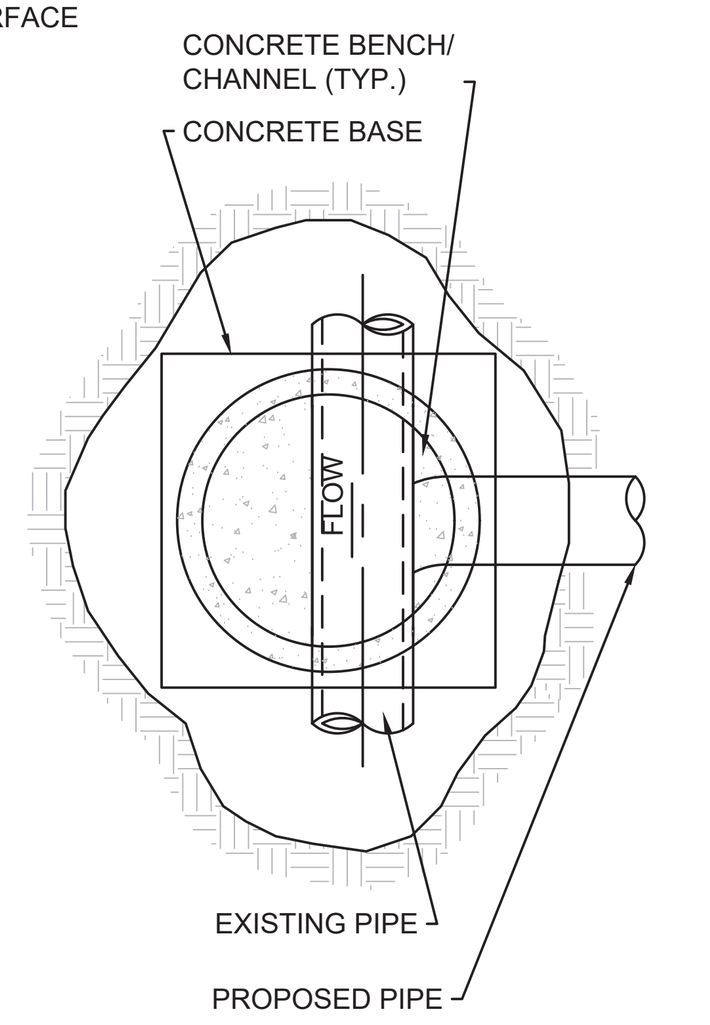

NOTES:
1. PROPOSED STORM SEWER SHALL BE FLUSH WITH INSIDE SURFACE OF THE PROPOSED MANHOLE.
2. PRECAST UNITS, APPLY (18 MIL) OF CARBOLINE 50 TO EXTERNAL WALLS.
3. BLOCK UNITS, APPLY 1/2" PARGING TO INTERIOR & EXTERIOR WALLS AND (15 MIL) OF HOT ASPHALITC TAR OR PITCH TO EXTERIOR WALLS.
4. ALL PRECAST CONCRETE STRUCTURES, CONCRETE BLOCK, OR FORM-IN-PLACE CONCRETE SHALL BE MADE OF NJDOT CLASS 'B', 4,000 PSI CONCRETE WITH 5% TO 7% AIR ENTRAINMENT.
5. UNLESS OTHERWISE SPECIFIED, ALL MATERIALS SHALL BE COMPACTED TO 95% MODIFIED PROCTOR DENSITY.
6. LADDER RUNGS SHALL BE PROVIDED IN ALL STRUCTURES EVERY 12" STARTING A MAXIMUM OF 12" FROM THE TOP OF THE CONCRETE INFILL TO WITHIN NO MORE THAN 24" FROM THE GRATE.
7. INSTALL LADDER RUNGS ON SIDE FACING TRAFFIC.
8. LADDER RUNGS TO COMPLY WITH ASTM C478 OR SPECIFIED DETAIL.
9. STRUCTURE SHALL BE INSTALLED ON 8" THICK PAD OF ¾" CLEAN STONE INSTALLED ON FIRM BEARING.
10. THE CONTRACTOR SHALL SUBMIT SHOP DRAWINGS FOR ALL STRUCTURES, SIGNED AND SEALED BY A PROFESSIONAL ENGINEER LICENSED TO PRACTICE IN THE STATE, INDICATING THAT THE STRUCTURE IS DESIGNED FOR HS-25 LOADING.
11. PAVE CHANNEL INVERT ALONG ℄ OF SINGLE OUTLET PIPE OR BETWEEN ℄'S OF 2 OR MORE PIPE OPENINGS

SEQUENCE OF CONSTRUCTION
1. EXCAVATE AND EXPOSE PIPE AND SUPPORT EXISTING PIPE TEMPORARILY.
2. SET PRECAST WALLS ON CONCRETE BRICK RESTING ON FIRM BEARING.
3. POUR CONCRETE BASE.
4. MORTAR PRECAST PIPE OPENING.
5. POUR CONCRETE AROUND EXISTING PIPE, CUT EXISTING PIPE.

1 STORM SEWER DOGHOUSE MANHOLE
SCALE: NTS

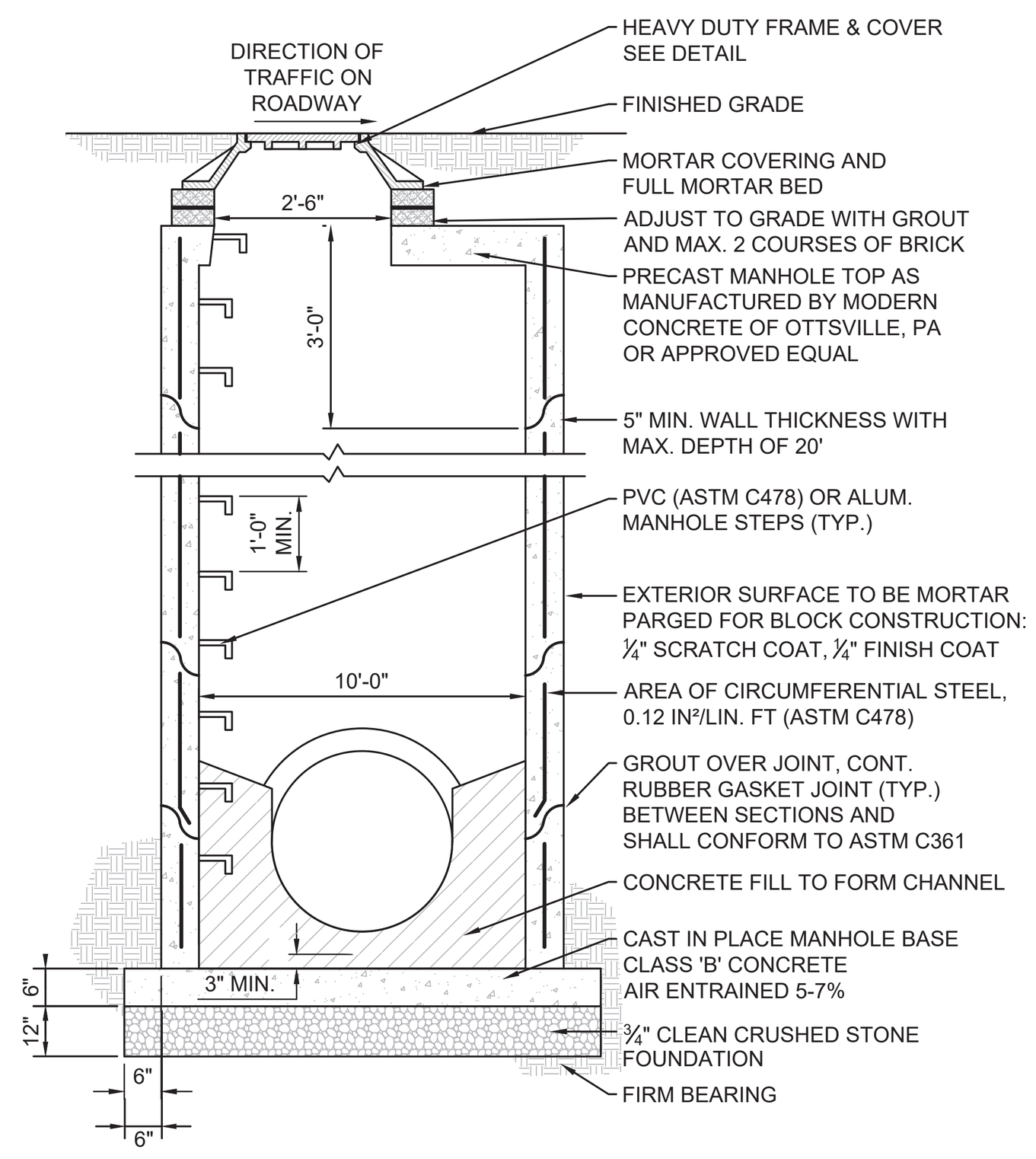

NOTES:
1. PRECAST UNITS, APPLY (18 MIL) OF CARBOLINE 50 TO EXTERNAL WALLS.
2. ALL PRECAST CONCRETE STRUCTURES, CONCRETE BLOCK, OR FORM-IN-PLACE CONCRETE SHALL BE MADE OF NJDOT CLASS 'B', 4,000 PSI CONCRETE WITH 5% TO 7% AIR ENTRAINMENT.
3. UNLESS OTHERWISE SPECIFIED, ALL MATERIALS SHALL BE COMPACTED TO 95% MODIFIED PROCTOR DENSITY.
4. LADDER RUNGS SHALL BE PROVIDED IN ALL STRUCTURES EVERY 12" STARTING A MAXIMUM OF 12" FROM THE TOP OF THE CONCRETE INFILL TO WITHIN NO MORE THAN 24" FROM THE GRATE/RIM.
5. INSTALL LADDER RUNGS ON SIDE FACING TRAFFIC.
6. LADDER RUNGS TO COMPLY WITH ASTM C478 OR SPECIFIED DETAIL.
7. STRUCTURE SHALL BE INSTALLED ON 8" THICK PAD OF ¾" CLEAN STONE INSTALLED ON FIRM BEARING.
8. THE CONTRACTOR SHALL SUBMIT SHOP DRAWINGS FOR ALL STRUCTURES, SIGNED AND SEALED BY A PROFESSIONAL ENGINEER LICENSED TO PRACTICE IN THE STATE, INDICATING THAT THE STRUCTURE IS DESIGNED FOR H-20 LOADING.
9. PAVE CHANNEL INVERT ALONG ℄ OF SINGLE OUTLET PIPE OR BETWEEN ℄'S OF 2 OR MORE PIPE OPENINGS

2 OVERSIZED PRECAST STORM MANHOLE
SCALE: NTS

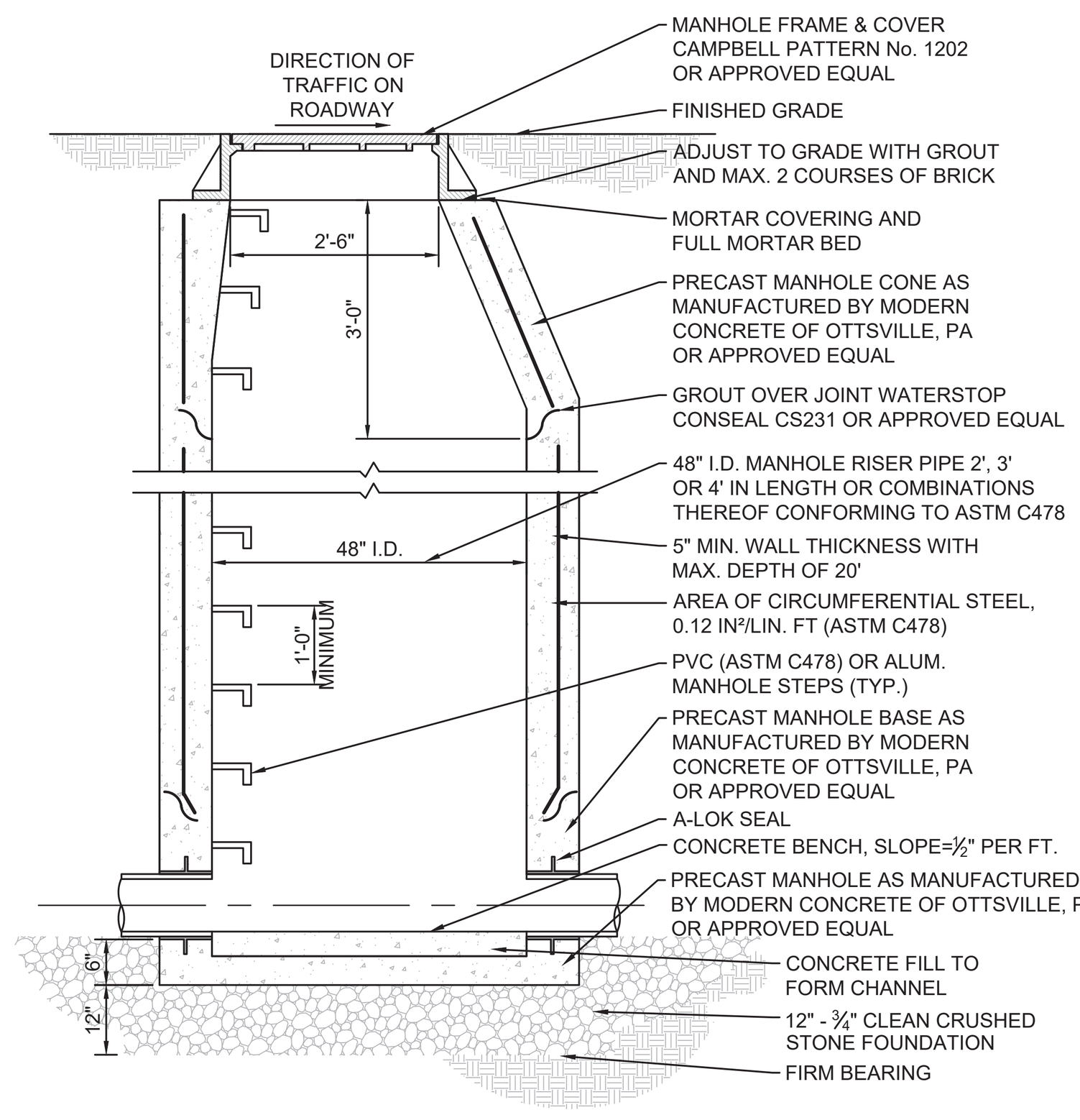

NOTES:
1. PRECAST UNITS, APPLY (18 MIL) OF CARBOLINE 50 TO EXTERNAL WALLS.
2. ALL PRECAST CONCRETE STRUCTURES, CONCRETE BLOCK, OR FORM-IN-PLACE CONCRETE SHALL BE MADE OF NJDOT CLASS 'B', 4,000 PSI CONCRETE WITH 5% TO 7% AIR ENTRAINMENT.
3. UNLESS OTHERWISE SPECIFIED, ALL MATERIALS SHALL BE COMPACTED TO 95% MODIFIED PROCTOR DENSITY.
4. LADDER RUNGS SHALL BE PROVIDED IN ALL STRUCTURES EVERY 12" STARTING A MAXIMUM OF 12" FROM THE TOP OF THE CONCRETE INFILL TO WITHIN NO MORE THAN 24" FROM THE GRATE/RIM.
5. INSTALL LADDER RUNGS ON SIDE FACING TRAFFIC.
6. LADDER RUNGS TO COMPLY WITH ASTM C478 OR SPECIFIED DETAIL.
7. STRUCTURE SHALL BE INSTALLED ON 8" THICK PAD OF ¾" CLEAN STONE INSTALLED ON FIRM BEARING.
8. THE CONTRACTOR SHALL SUBMIT SHOP DRAWINGS FOR ALL STRUCTURES, SIGNED AND SEALED BY A PROFESSIONAL ENGINEER LICENSED TO PRACTICE IN THE STATE, INDICATING THAT THE STRUCTURE IS DESIGNED FOR H-20 LOADING.
9. PAVE CHANNEL INVERT ALONG ℄ OF SINGLE OUTLET PIPE OR BETWEEN ℄'S OF 2 OR MORE PIPE OPENINGS

3 STORM MANHOLE
SCALE: NTS

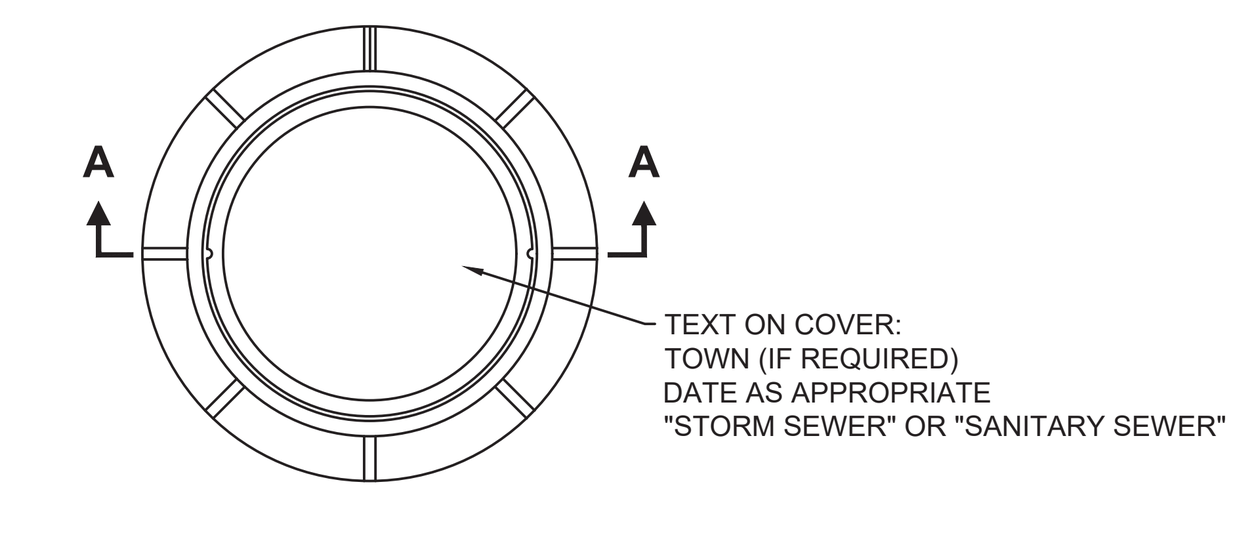

SECTIONAL PLAN

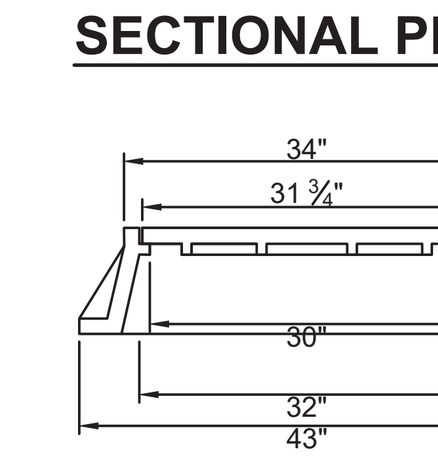

SECTION A-A

NOTE:
1. MH FRAME AND COVER SHALL BE CAMPBELL FOUNDRY PATTERN No. 1012A OR APPROVED EQUAL.

4 STANDARD MANHOLE COVER
SCALE: NTS

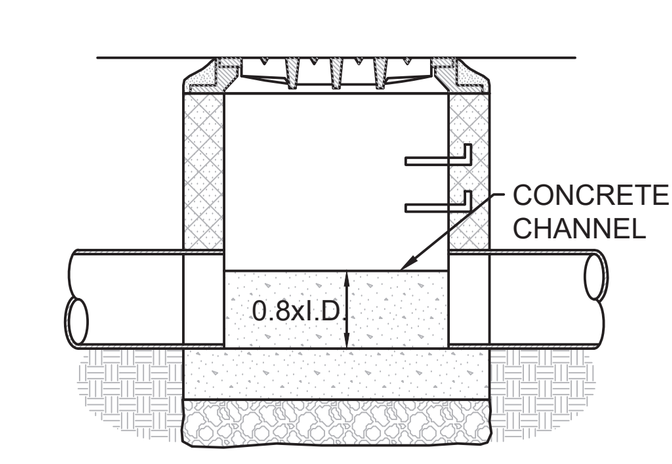

SECTION A-A FOR THROUGH INLET

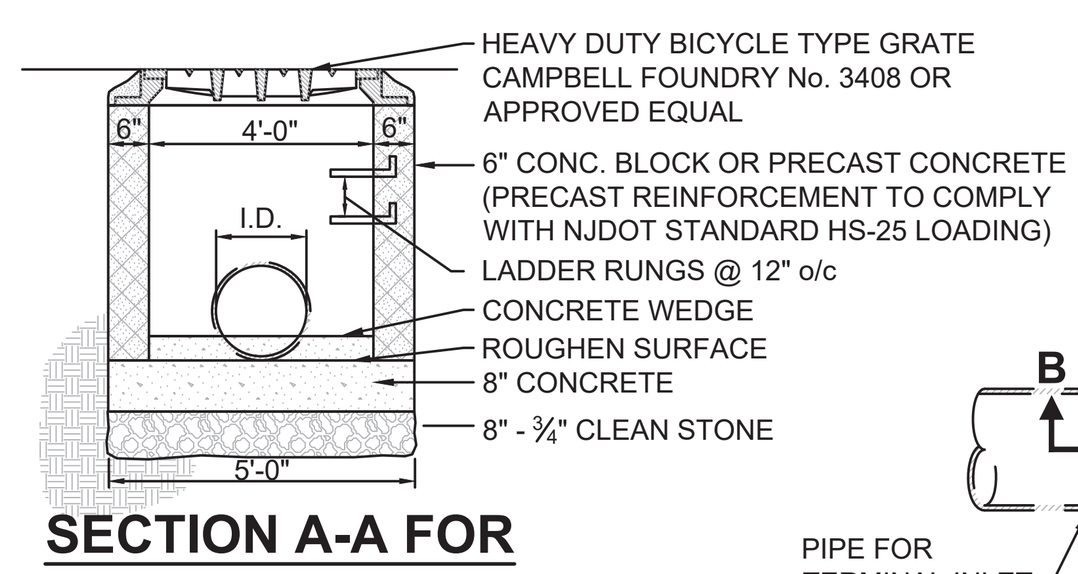

SECTION A-A FOR TERMINAL INLET

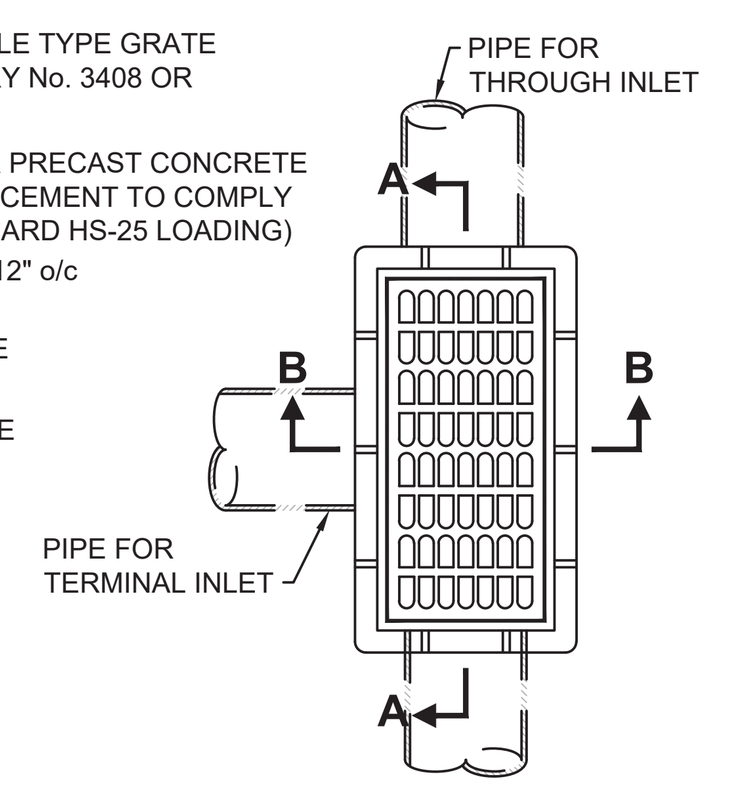

PLAN

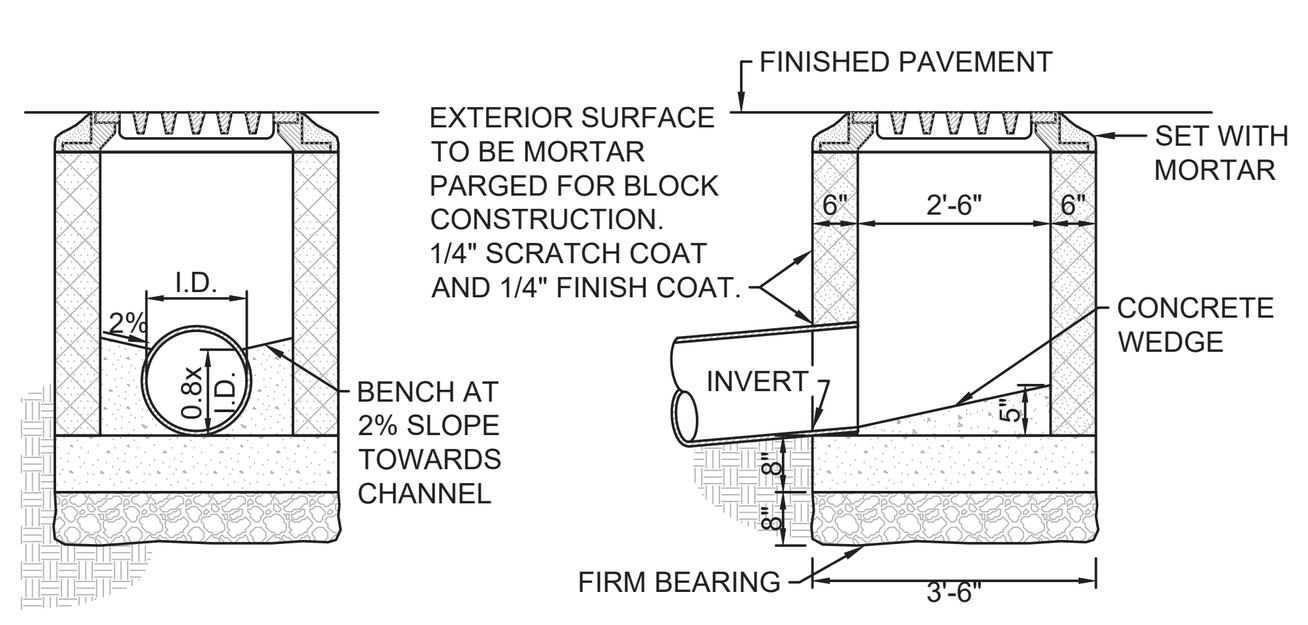

SECTION B-B FOR THROUGH INLET

SECTION B-B FOR TERMINAL INLET

NOTES:
1. ALL PRECAST CONCRETE STRUCTURES, CONCRETE BLOCK, OR FORM-IN-PLACE CONCRETE SHALL BE MADE OF NJDOT CLASS 'B', 4000 PSI CONCRETE WITH 5% TO 7% AIR ENTRAINMENT.
2. UNLESS OTHERWISE SPECIFIED, ALL MATERIALS SHALL BE COMPACTED TO 95% MODIFIED PROCTOR DENSITY.
3. LADDER RUNGS SHALL BE PROVIDED IN ALL STRUCTURES EVERY 12" STARTING A MAXIMUM OF 12" FROM THE TOP OF THE CONCRETE INFILL TO WITHIN NO MORE THAN 24" FROM THE GRATE.
4. INSTALL LADDER RUNGS ON SIDE FACING TRAFFIC.
5. LADDER RUNGS TO COMPLY WITH ASTM C478 OR SPECIFIED DETAIL.
6. STRUCTURE SHALL BE INSTALLED ON 8" THICK PAD OF ¾" CLEAN STONE INSTALLED ON FIRM BEARING.
7. THE CONTRACTOR SHALL SUBMIT SHOP DRAWINGS FOR ALL STRUCTURES, SIGNED AND SEALED BY A PROFESSIONAL ENGINEER LICENSED TO PRACTICE IN THE STATE, INDICATING THAT THE STRUCTURE IS DESIGNED FOR HS-20 LOADING.
8. PAVE CHANNEL INVERT ALONG ℄ OF SINGLE OUTLET PIPE OR BETWEEN ℄'S OF 2 OR MORE PIPE OPENINGS

5 TYPE "A" INLET
SCALE: NTS

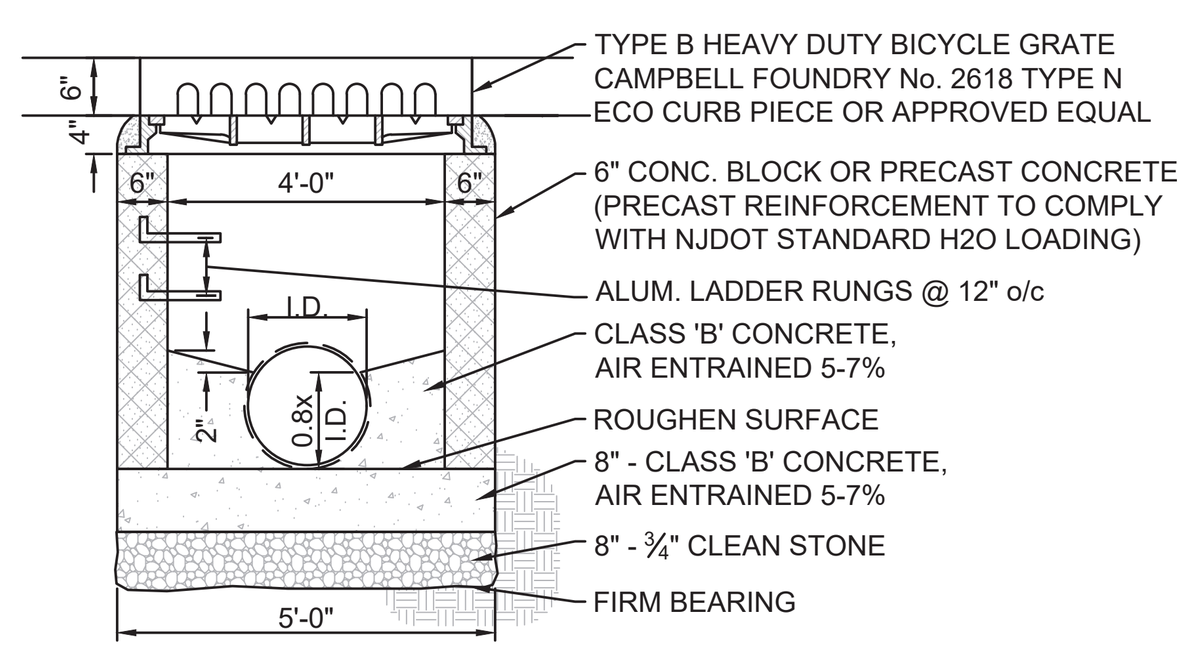

SECTION A-A

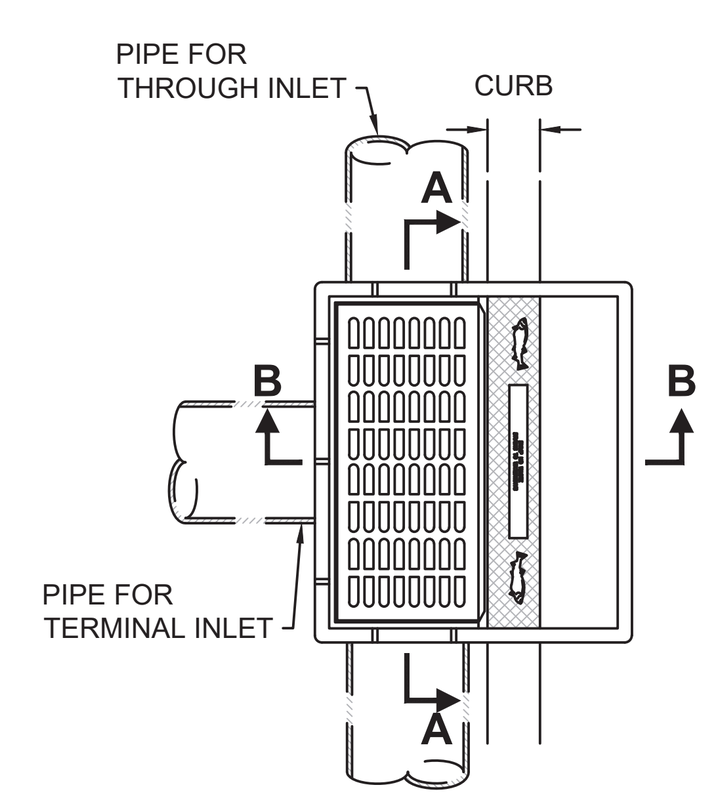

PLAN

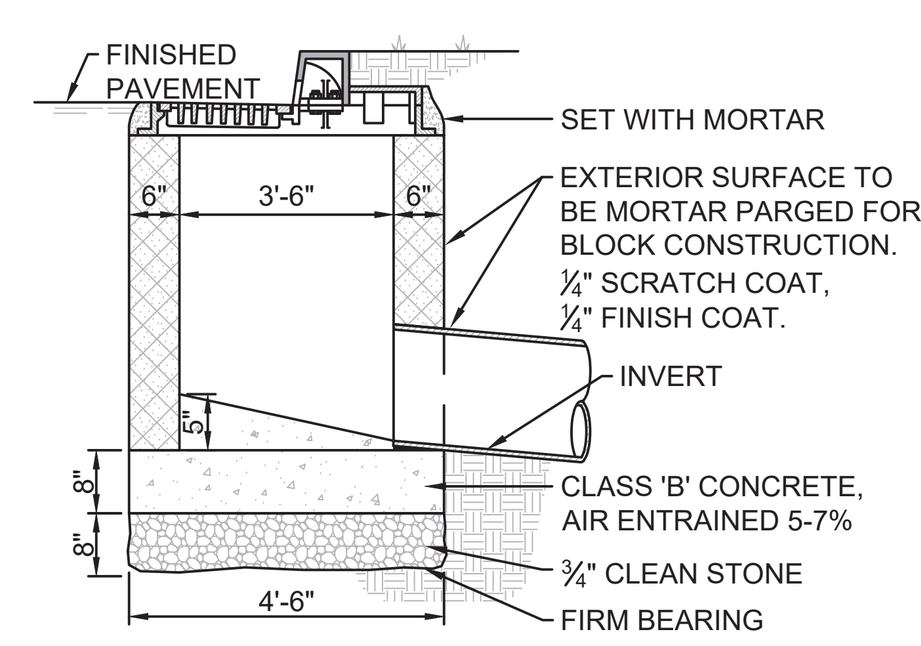

SECTION B-B

NOTES:
1. ALL PRECAST CONCRETE STRUCTURES, CONCRETE BLOCK, OR FORM-IN-PLACE CONCRETE SHALL BE MADE OF NJDOT CLASS 'B', 4000 PSI CONCRETE WITH 5% TO 7% AIR ENTRAINMENT.
2. UNLESS OTHERWISE SPECIFIED, ALL MATERIALS SHALL BE COMPACTED TO 95% MODIFIED PROCTOR DENSITY.
3. LADDER RUNGS SHALL BE PROVIDED IN ALL STRUCTURES EVERY 12" STARTING A MAXIMUM OF 12" FROM THE TOP OF THE CONCRETE INFILL TO WITHIN NO MORE THAN 24" FROM THE GRATE.
4. INSTALL LADDER RUNGS ON SIDE FACING TRAFFIC.
5. LADDER RUNGS TO COMPLY WITH ASTM C478 OR SPECIFIED DETAIL.
6. STRUCTURE SHALL BE INSTALLED ON 8" THICK PAD OF ¾" CLEAN STONE INSTALLED ON FIRM BEARING.
7. THE CONTRACTOR SHALL SUBMIT SHOP DRAWINGS FOR ALL STRUCTURES, SIGNED AND SEALED BY A PROFESSIONAL ENGINEER LICENSED TO PRACTICE IN THE STATE, INDICATING THAT THE STRUCTURE IS DESIGNED FOR HS-20 LOADING.
8. PAVE CHANNEL INVERT ALONG ℄ OF SINGLE OUTLET PIPE OR BETWEEN ℄'S OF 2 OR MORE PIPE OPENINGS

6 TYPE "B" INLET
SCALE: NTS

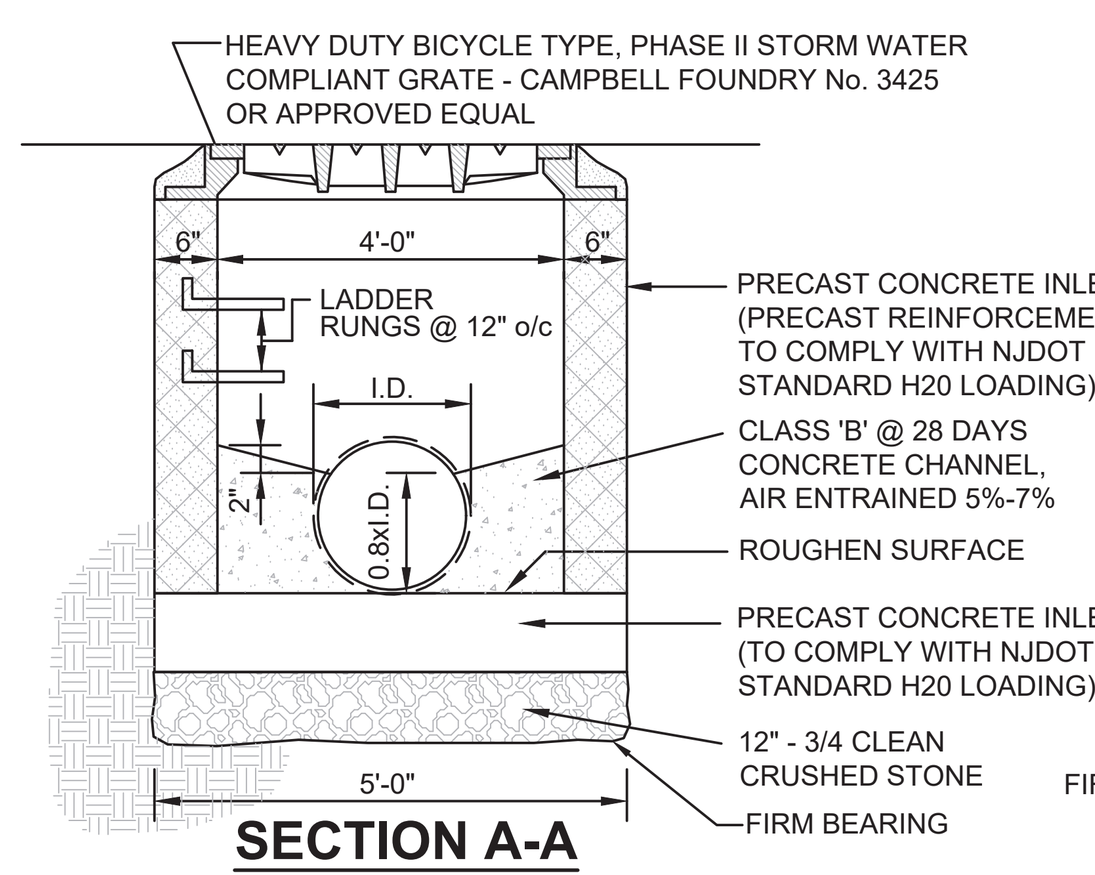

SECTION A-A

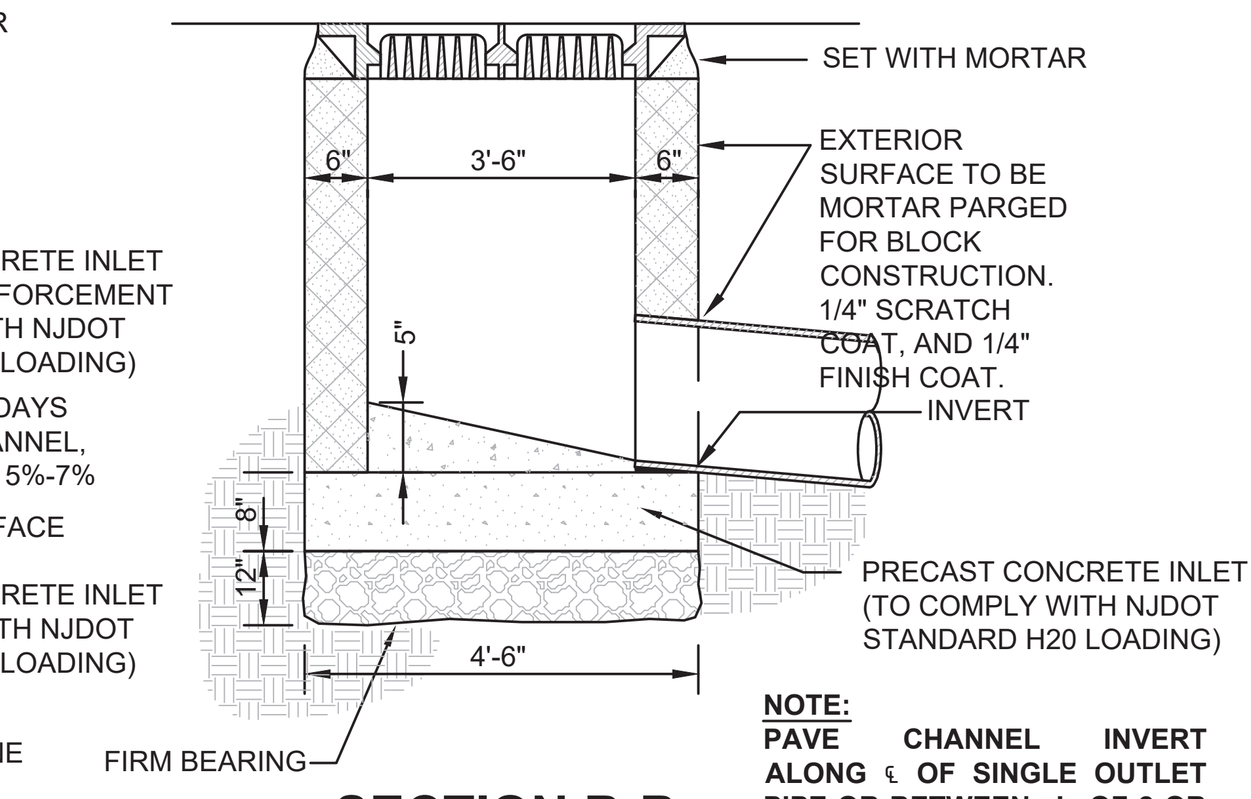

SECTION B-B

NOTE:
PAVE CHANNEL INVERT ALONG ℄ OF SINGLE OUTLET PIPE OR BETWEEN ℄'s OF 2 OR MORE PIPE OPENINGS

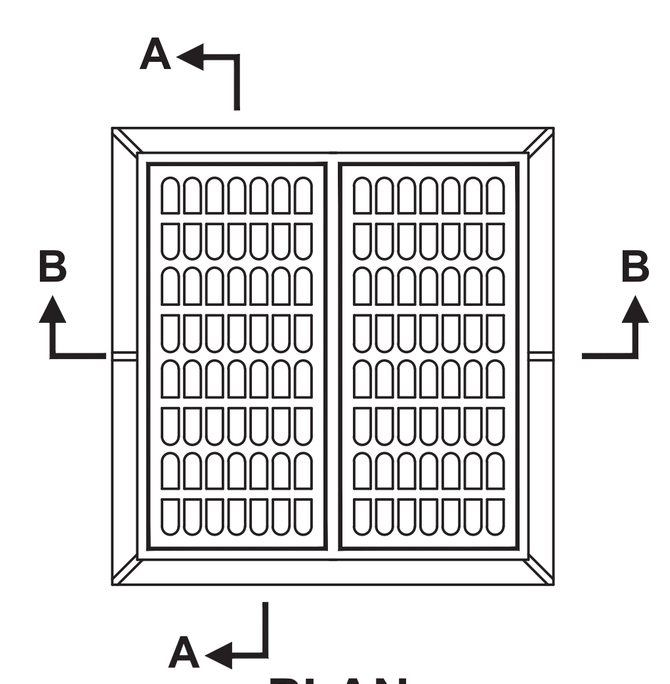

PLAN

NOTES:
1. ALL PRECAST CONCRETE STRUCTURES, CONCRETE BLOCK, OR FORM-IN-PLACE CONCRETE SHALL BE MADE OF NJDOT CLASS 'B', 4000 PSI CONCRETE WITH 5% TO 7% AIR ENTRAINMENT.
2. UNLESS OTHERWISE SPECIFIED, ALL MATERIALS SHALL BE COMPACTED TO 95% MODIFIED PROCTOR DENSITY.
3. LADDER RUNGS SHALL BE PROVIDED IN ALL STRUCTURES EVERY 12" STARTING A MAXIMUM OF 12" FROM THE TOP OF THE CONCRETE INFILL TO WITHIN NO MORE THAN 24" FROM THE GRATE.
4. INSTALL LADDER RUNGS ON SIDE FACING TRAFFIC.
5. LADDER RUNGS TO COMPLY WITH ASTM C478 OR SPECIFIED DETAIL.
6. STRUCTURE SHALL BE INSTALLED ON 8" THICK PAD OF ¾" CLEAN STONE INSTALLED ON FIRM BEARING.
7. THE CONTRACTOR SHALL SUBMIT SHOP DRAWINGS FOR ALL STRUCTURES, SIGNED AND SEALED BY A PROFESSIONAL ENGINEER LICENSED TO PRACTICE IN THE STATE, INDICATING THAT THE STRUCTURE IS DESIGNED FOR HS-20 LOADING.
8. PAVE CHANNEL INVERT ALONG ℄ OF SINGLE OUTLET PIPE OR BETWEEN ℄'S OF 2 OR MORE PIPE OPENINGS

7 TYPE "E" INLET
SCALE: NTS

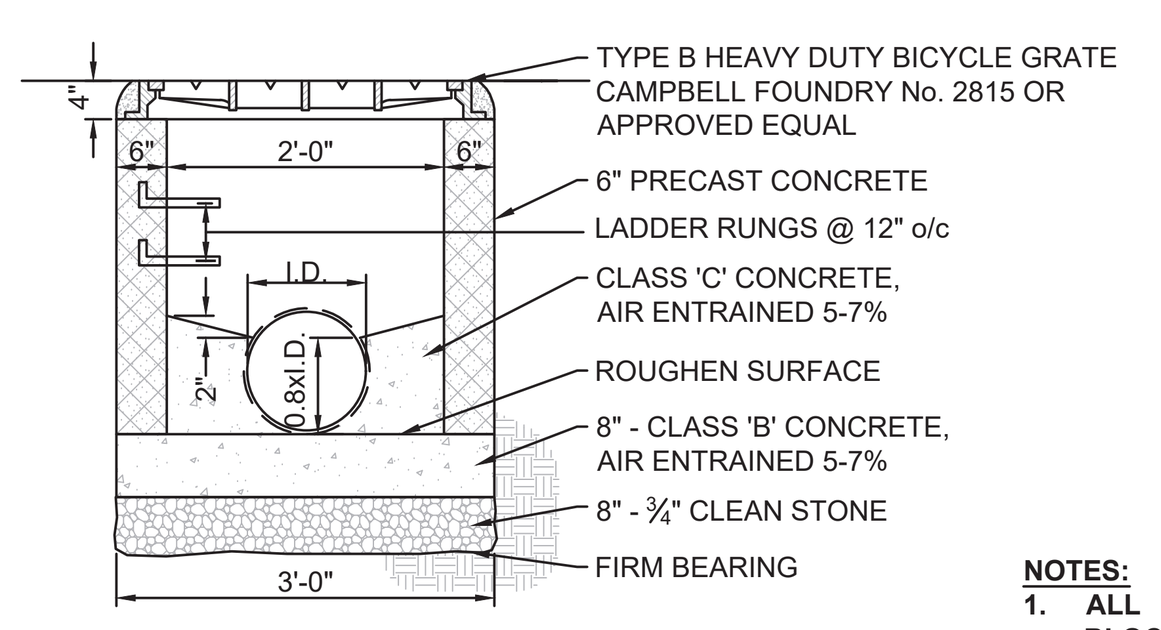

SECTION A-A

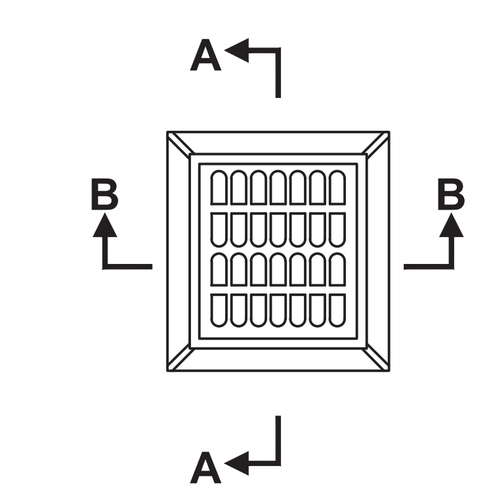

PLAN

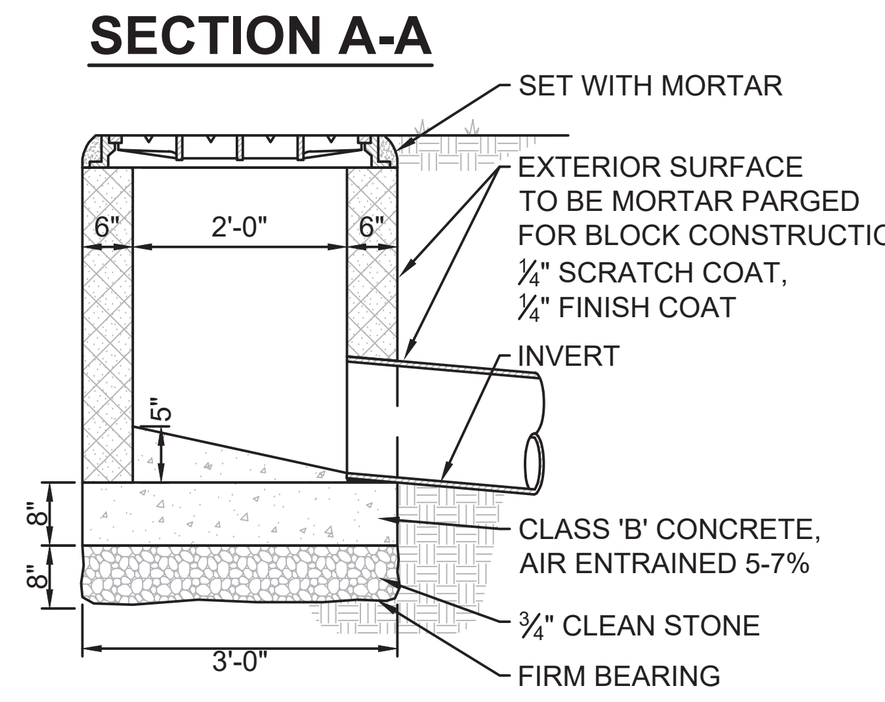

SECTION B-B

NOTES:
1. ALL PRECAST CONCRETE STRUCTURES, CONCRETE BLOCK, OR FORM-IN-PLACE CONCRETE SHALL BE MADE OF NJDOT CLASS 'B', 4000 PSI CONCRETE WITH 5% TO 7% AIR ENTRAINMENT.
2. UNLESS OTHERWISE SPECIFIED, ALL MATERIALS SHALL BE COMPACTED TO 95% MODIFIED PROCTOR DENSITY.
3. LADDER RUNGS SHALL BE PROVIDED IN ALL STRUCTURES EVERY 12" STARTING A MAXIMUM OF 12" FROM THE TOP OF THE CONCRETE INFILL TO WITHIN NO MORE THAN 24" FROM THE GRATE.
4. INSTALL LADDER RUNGS ON SIDE FACING TRAFFIC.
5. LADDER RUNGS TO COMPLY WITH ASTM C478 OR SPECIFIED DETAIL.
6. STRUCTURE SHALL BE INSTALLED ON 8" THICK PAD OF ¾" CLEAN STONE INSTALLED ON FIRM BEARING.
7. THE CONTRACTOR SHALL SUBMIT SHOP DRAWINGS FOR ALL STRUCTURES, SIGNED AND SEALED BY A PROFESSIONAL ENGINEER LICENSED TO PRACTICE IN THE STATE, INDICATING THAT THE STRUCTURE IS DESIGNED FOR HS-20 LOADING.
8. PAVE CHANNEL INVERT ALONG ℄ OF SINGLE OUTLET PIPE OR BETWEEN ℄'S OF 2 OR MORE PIPE OPENINGS

8 LAWN INLET
SCALE: NTS

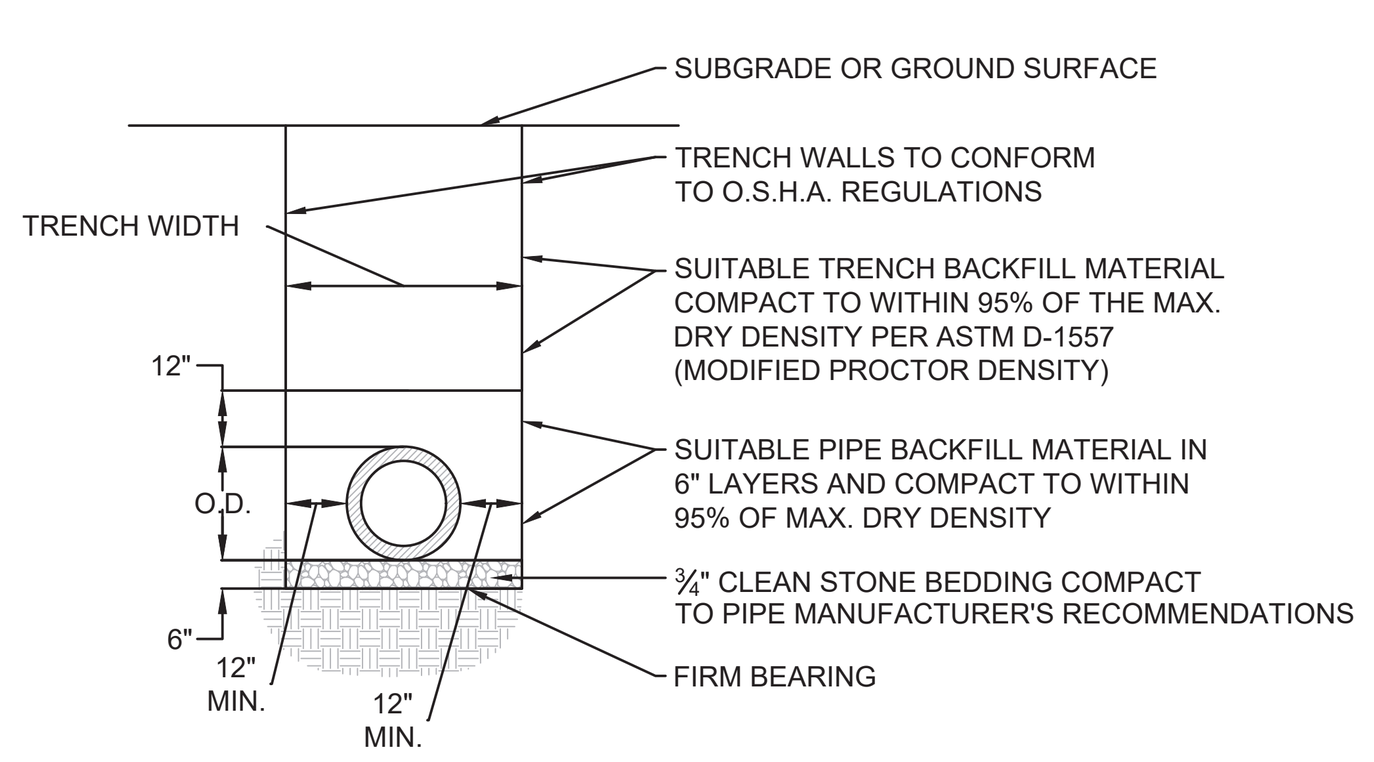

NOTES:
1. TRENCH WIDTH SHALL BE A MINIMUM OF 12" EACH SIDE PLUS THE OUTSIDE DIAMETER OF THE PIPE. TRENCH WIDTH SHALL NOT EXCEED THAT REQUIRED FOR PROPER INSTALLATION BACKFILL AND COMPACTION OPERATIONS.
2. ALL SUITABLE BACKFILL AND STONE BEDDING SHALL BE AS PER SPECIFICATIONS, PIPE MANUFACTURER REQUIREMENTS, AND APPROVED BY THE RESIDENT ENGINEER PRIOR TO INSTALLATION.
3. WHERE TRENCH PASSES THROUGH EXISTING PAVEMENT, THE PAVEMENT SHALL BE MECHANICALLY CUT. PATCHING SHALL CONSIST OF TACKING EDGES OF EXISTING PAVEMENT, AND INSTALLING NEW PAVEMENT. COMPACTION IN ACCORDANCE WITH NJDOT SPECIFICATIONS.
4. COMPACTION TO CONFORM TO ASTM D-1557.

9 HDPE PIPE TRENCH
SCALE: NTS

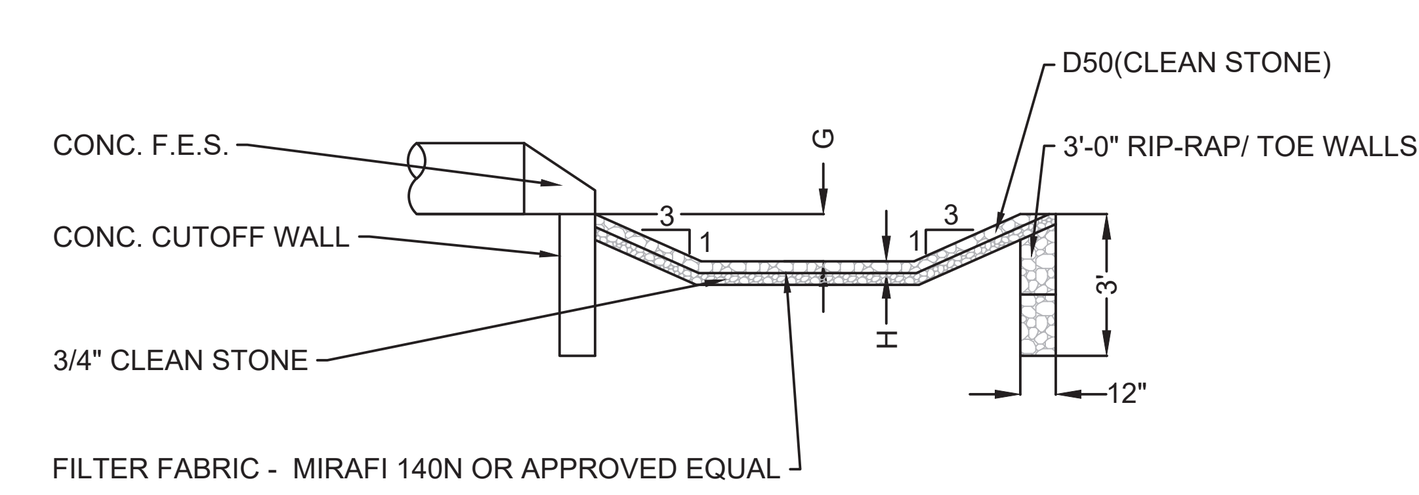

SECTION A-A

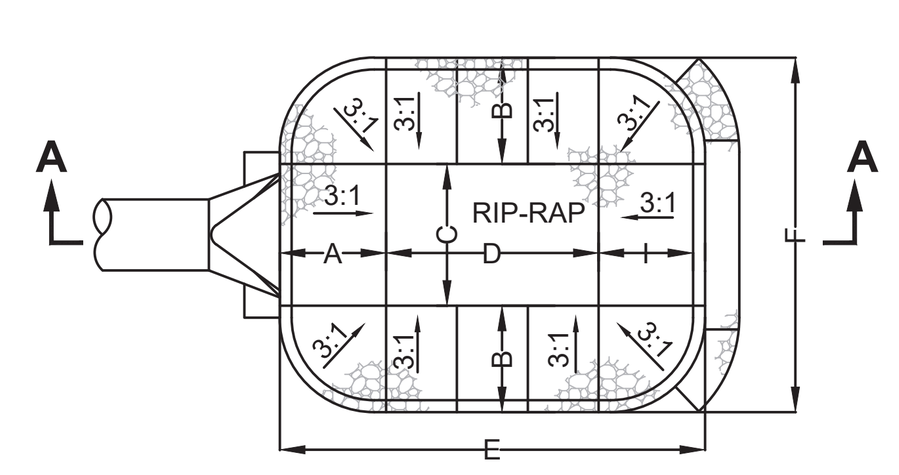

SINGLE INFLOW PIPE PLAN

FES	A	B	C	D	E	F	G	H	D50	I
OF-100	12.00 FT	6.00 FT	8.00 FT	12.00 FT	24.00 FT	20.00 FT	2.00 FT	2.50 FT	12 IN	12.00 FT
OF-300	13.50 FT	6.75 FT	9.00 FT	13.50 FT	27.00 FT	22.50 FT	2.25 FT	3.50 FT	9 IN	13.50 FT
OF-400	12.00 FT	6.00 FT	8.00 FT	12.00 FT	24.00 FT	20.00 FT	2.00 FT	2.50 FT	24 IN	12.00 FT

10 SCOUR HOLE
SCALE: NTS

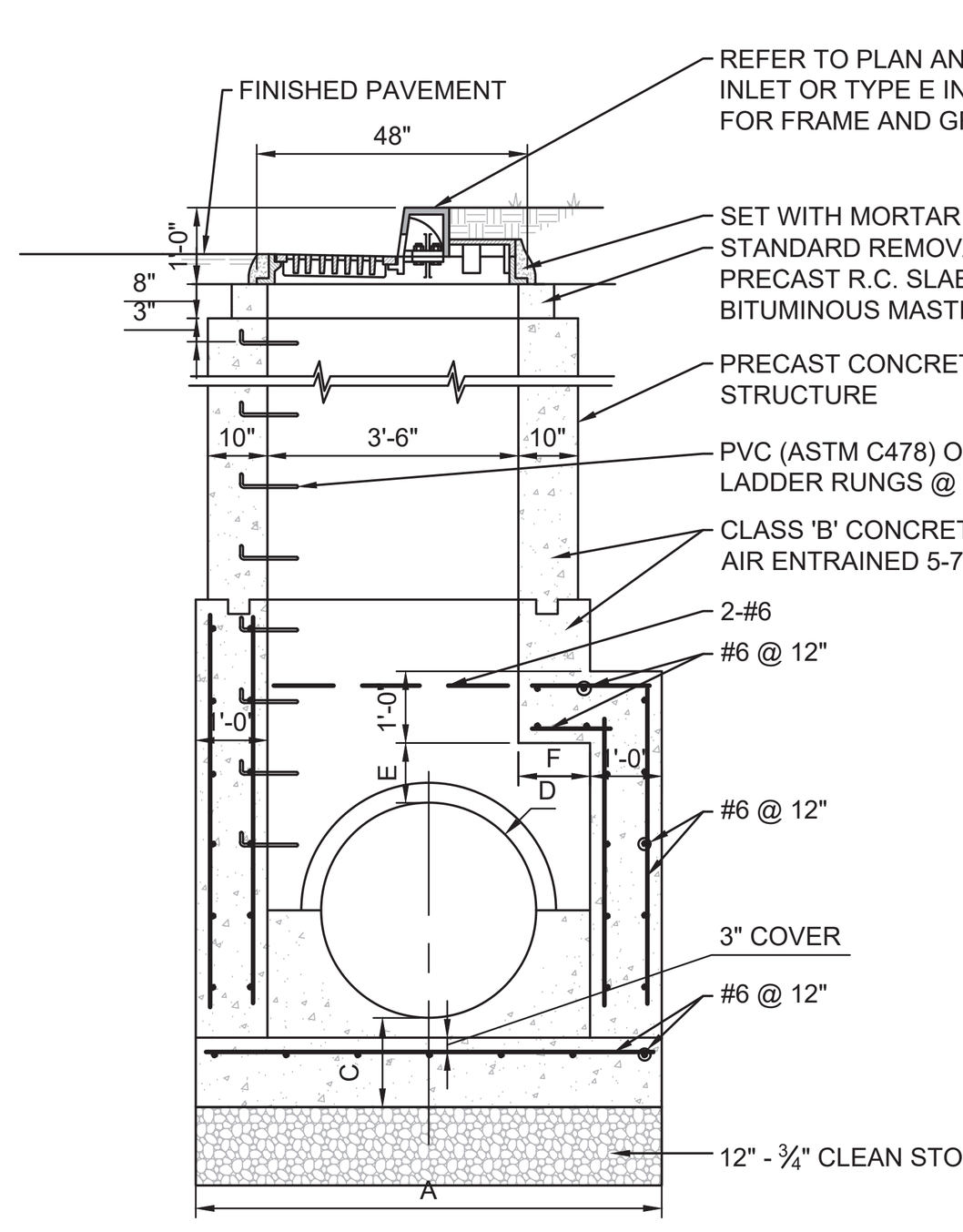

SECTION A-A

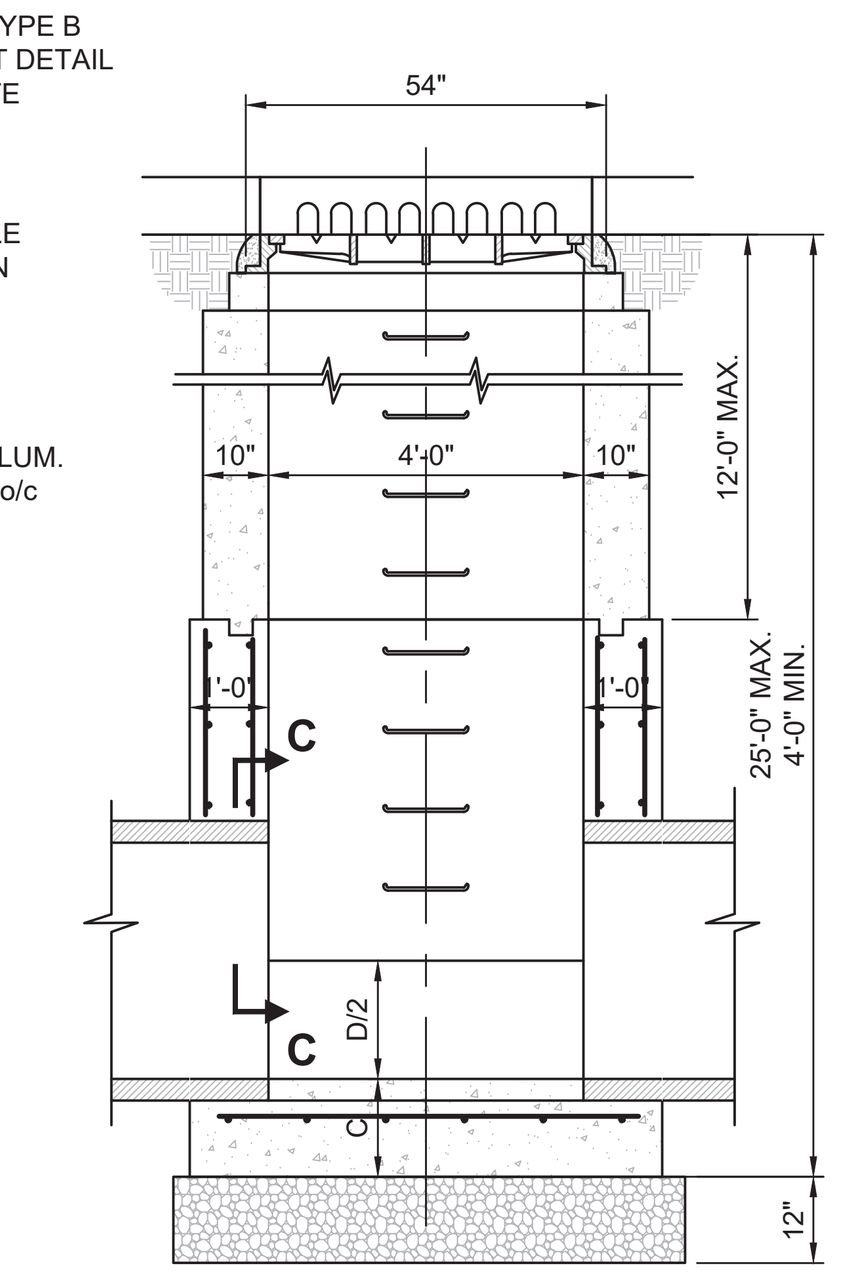

SECTION B-B

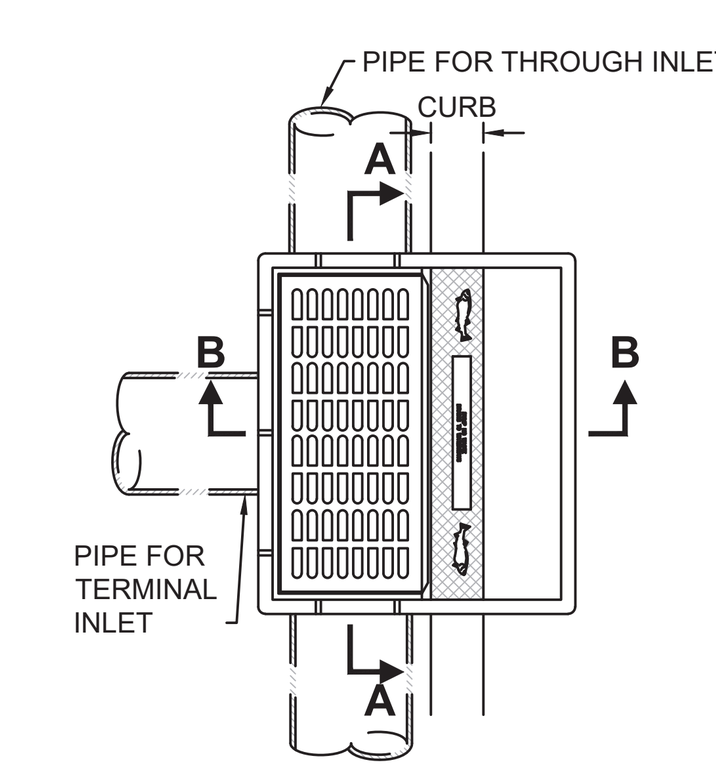

PLAN

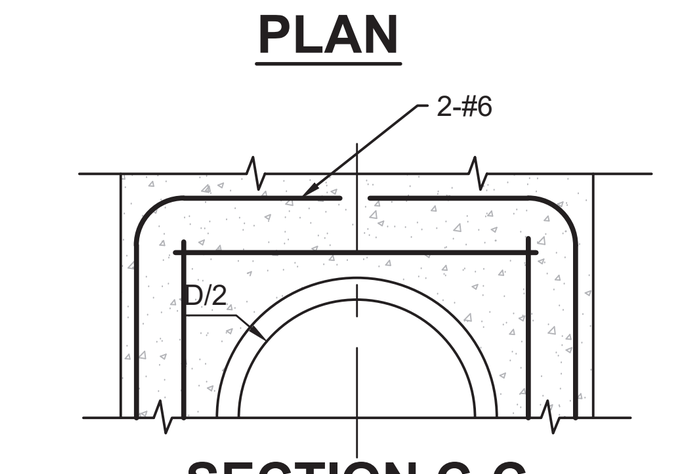

SECTION C-C

NOTES:
1. ALL INLETS SHALL BE DESIGNED TO WITHSTAND AASHTO H-20 LOADS.
2. CONTRACTOR TO SUBMIT SHOP DRAWING, PREPARED BY A NJ LICENSED ENGINEER, CONFIRMING THAT STRUCTURES ARE DESIGNED TO ACCOMMODATE AASHTO H-20 LOADING.
3. ENTIRE STRUCTURE SHALL BE PRE-CAST CONCRETE.

11 OVERSIZED INLET STRUCTURE FOR 30" DIA. STORM SEWER
SCALE: NTS

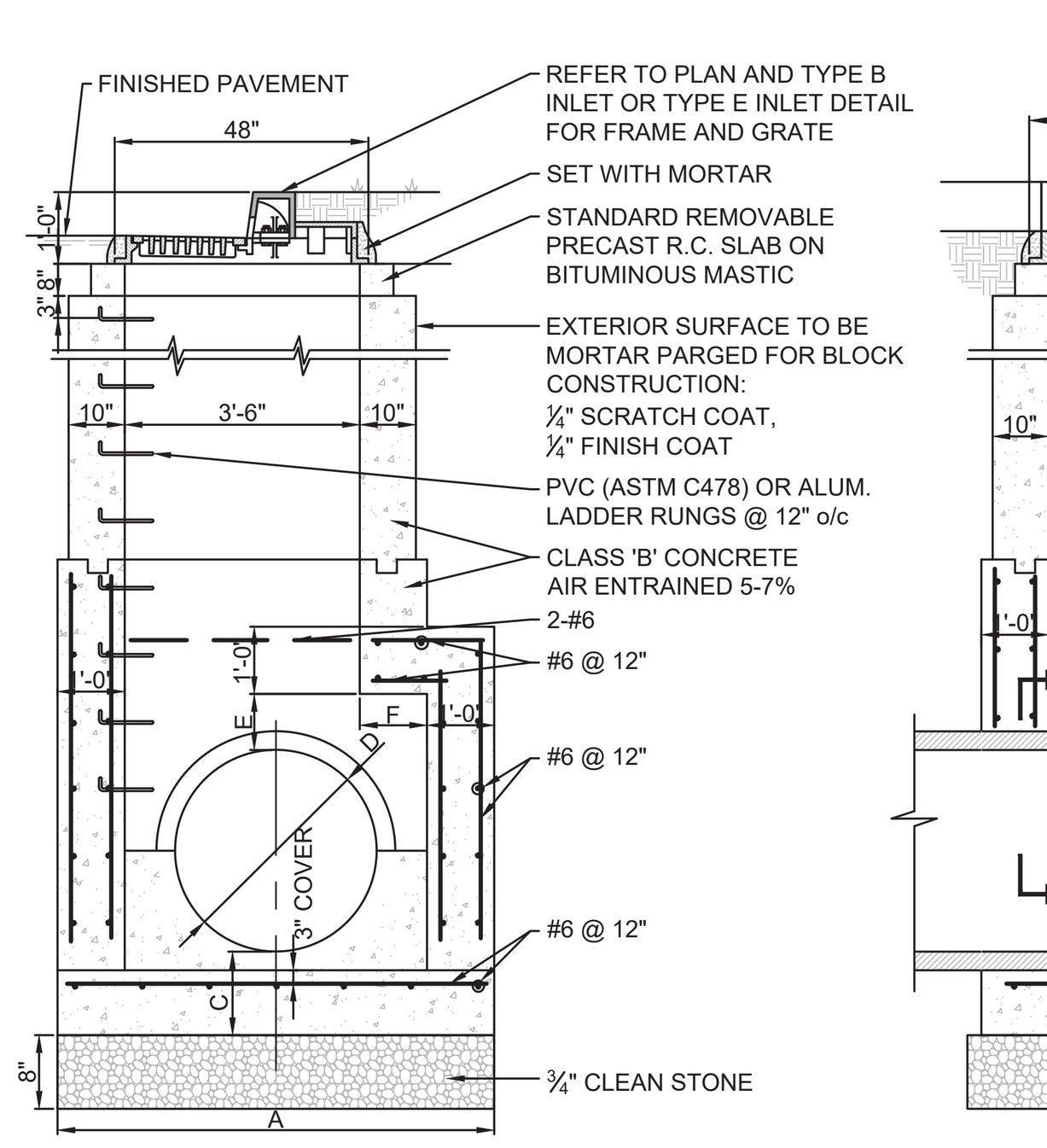

SECTION A-A

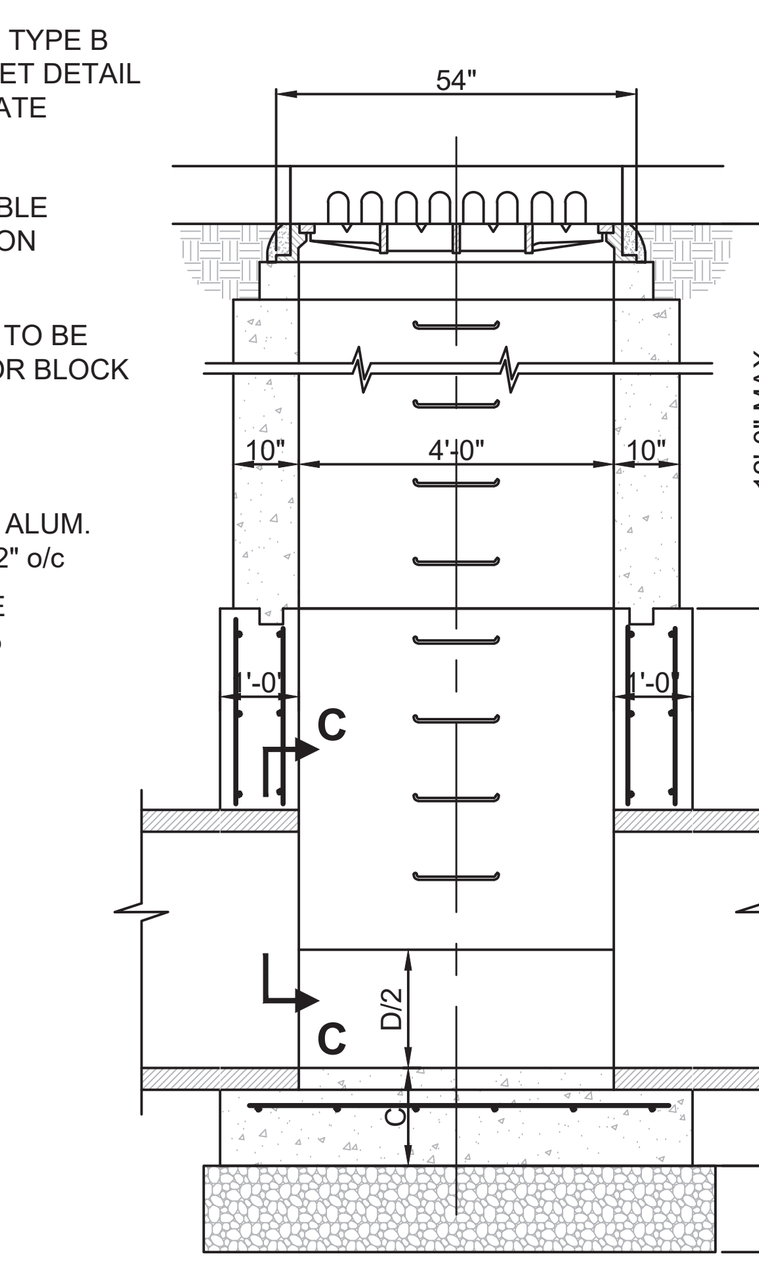

SECTION B-B

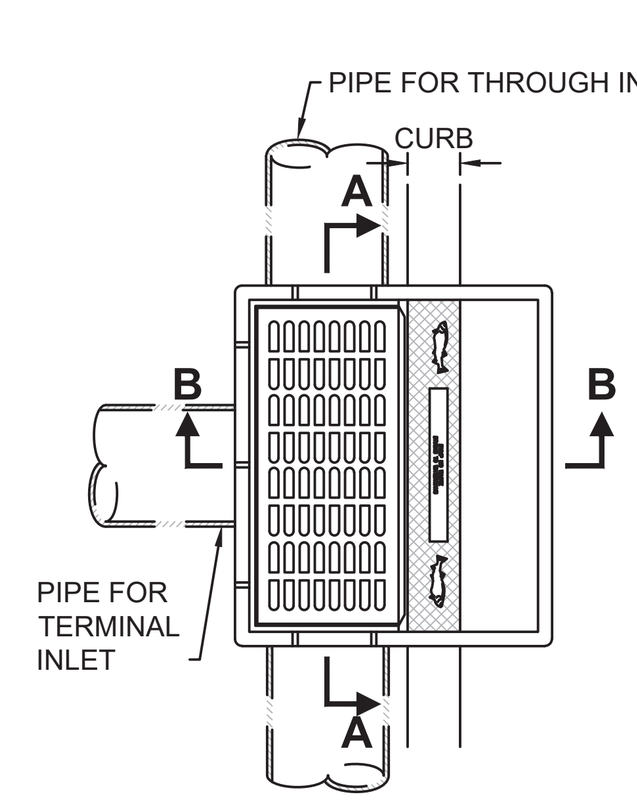

PLAN

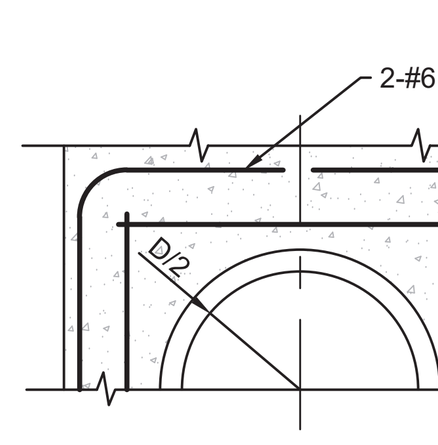

SECTION C-C

D	A	C	E	F	"O" BARS
36"	6'-6"	12"	10"	1'-0"	1
42"	7'-0"	12 ½"	10 ½"	1'-6"	3
48"	7'-6"	14"	11"	2'-0"	4

NOTES:
1. 2" COVER ON ALL REINFORCING STEEL EXCEPT AS SHOWN OTHERWISE.
2. KEYED CONSTRUCTION JOINTS REQUIRED BETWEEN ANY SUCCESIVE POURS.
3. SEE SCHEDULE FOR SPECIFIC INSIDE DIMENSIONS & FRAME NO.
4. PRECAST INLET TO BE CONSTRUCTED IN ACCORDANCE WITH N.J.D.O.T. SPECS.

9 OVERSIZED INLET STRUCTURE FOR 36" DIA. AND LARGER STORM SEWER
SCALE: NTS

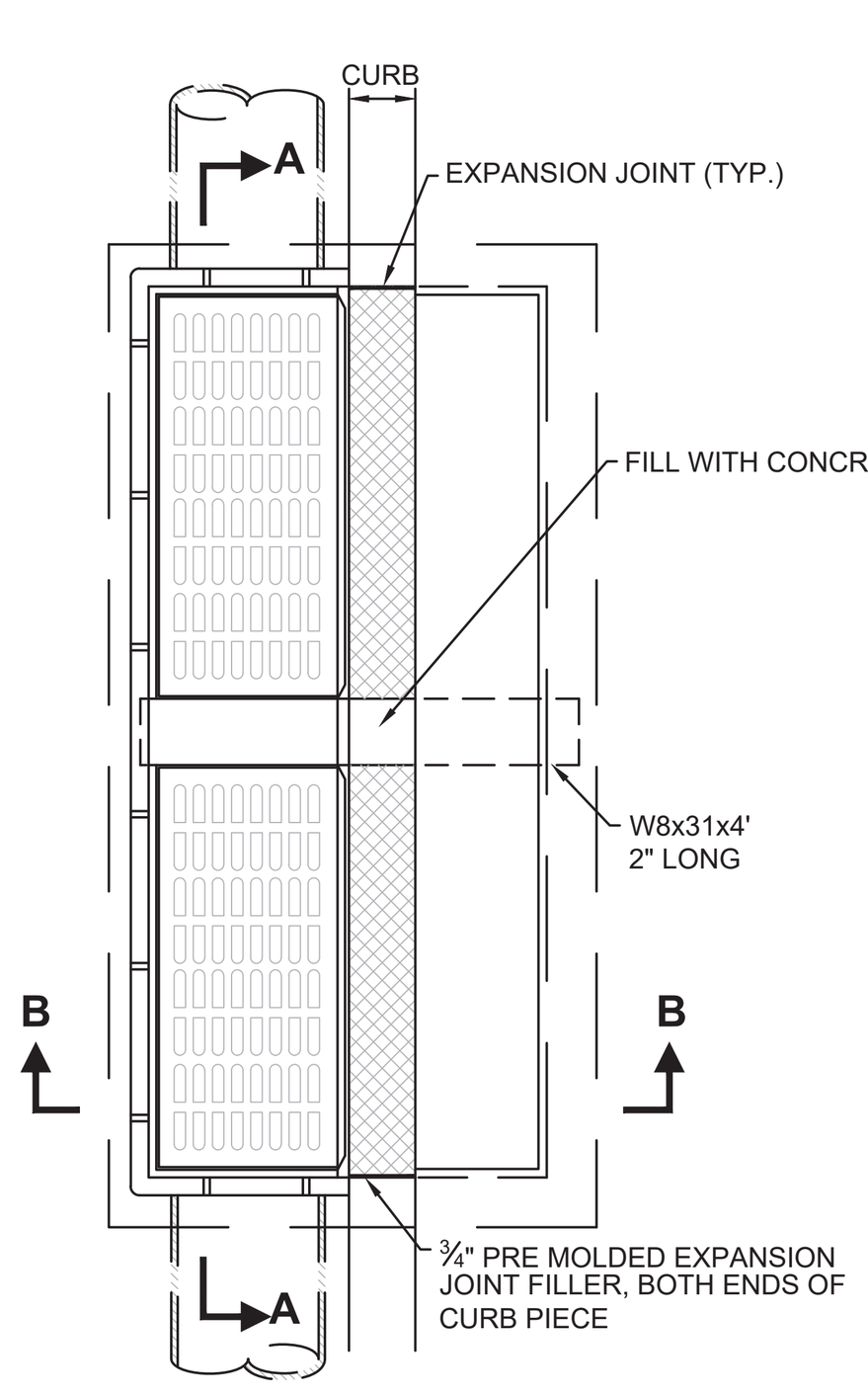

PLAN

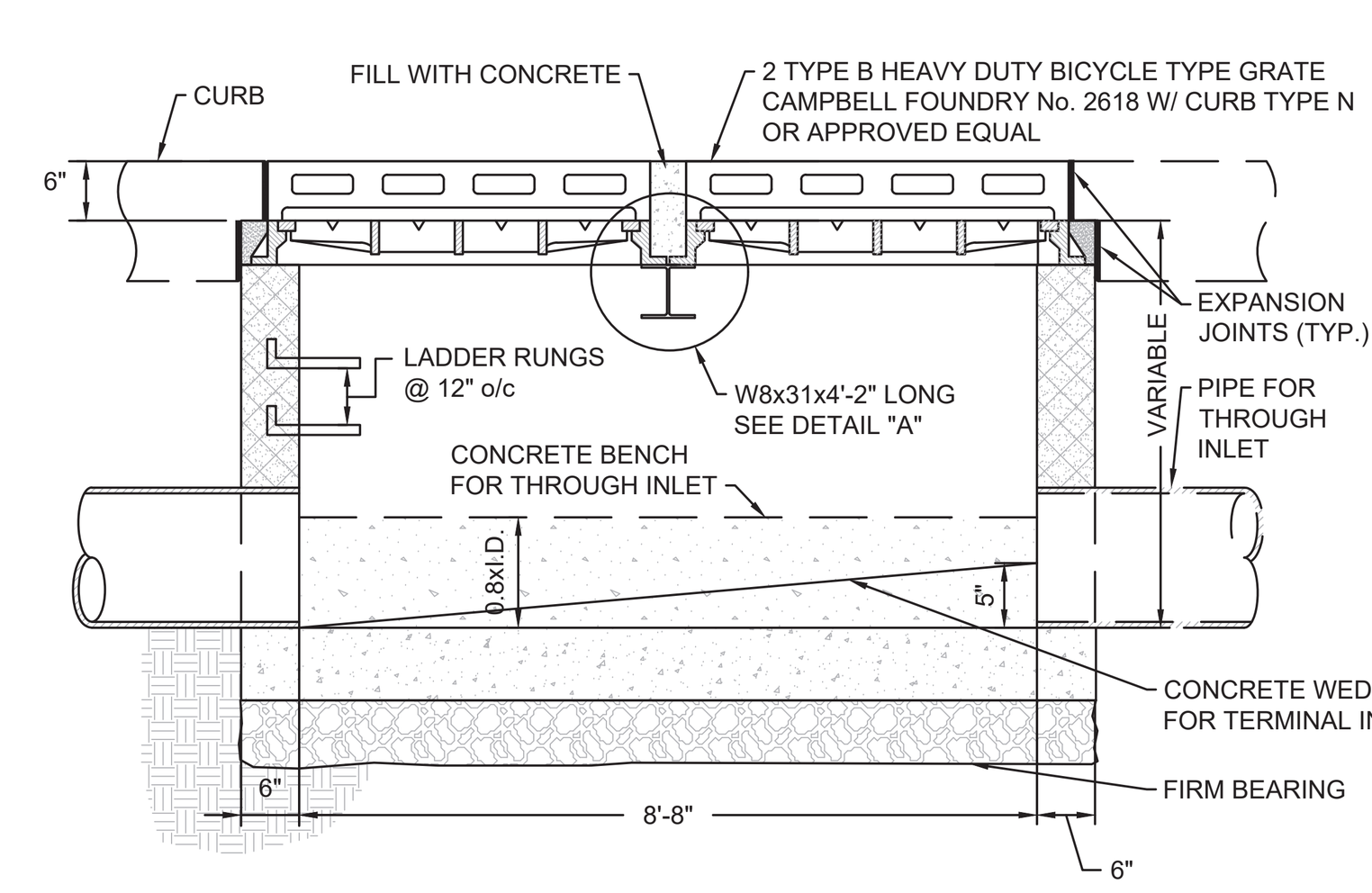

SECTION A-A

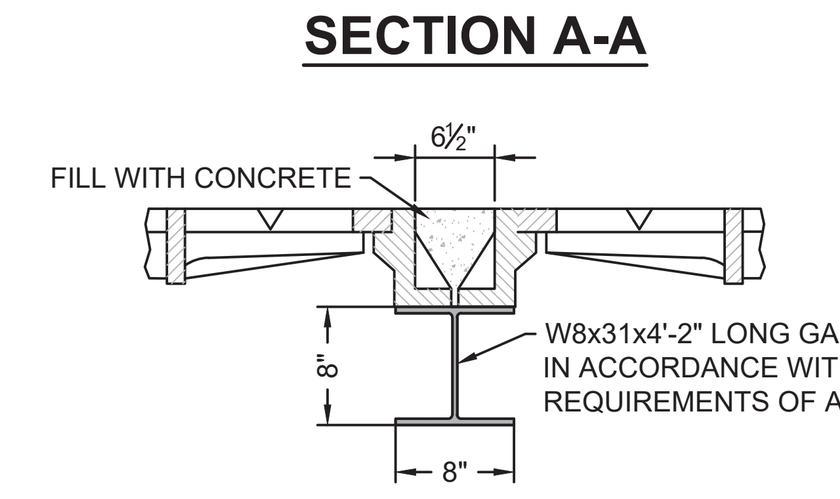

DETAIL "A"

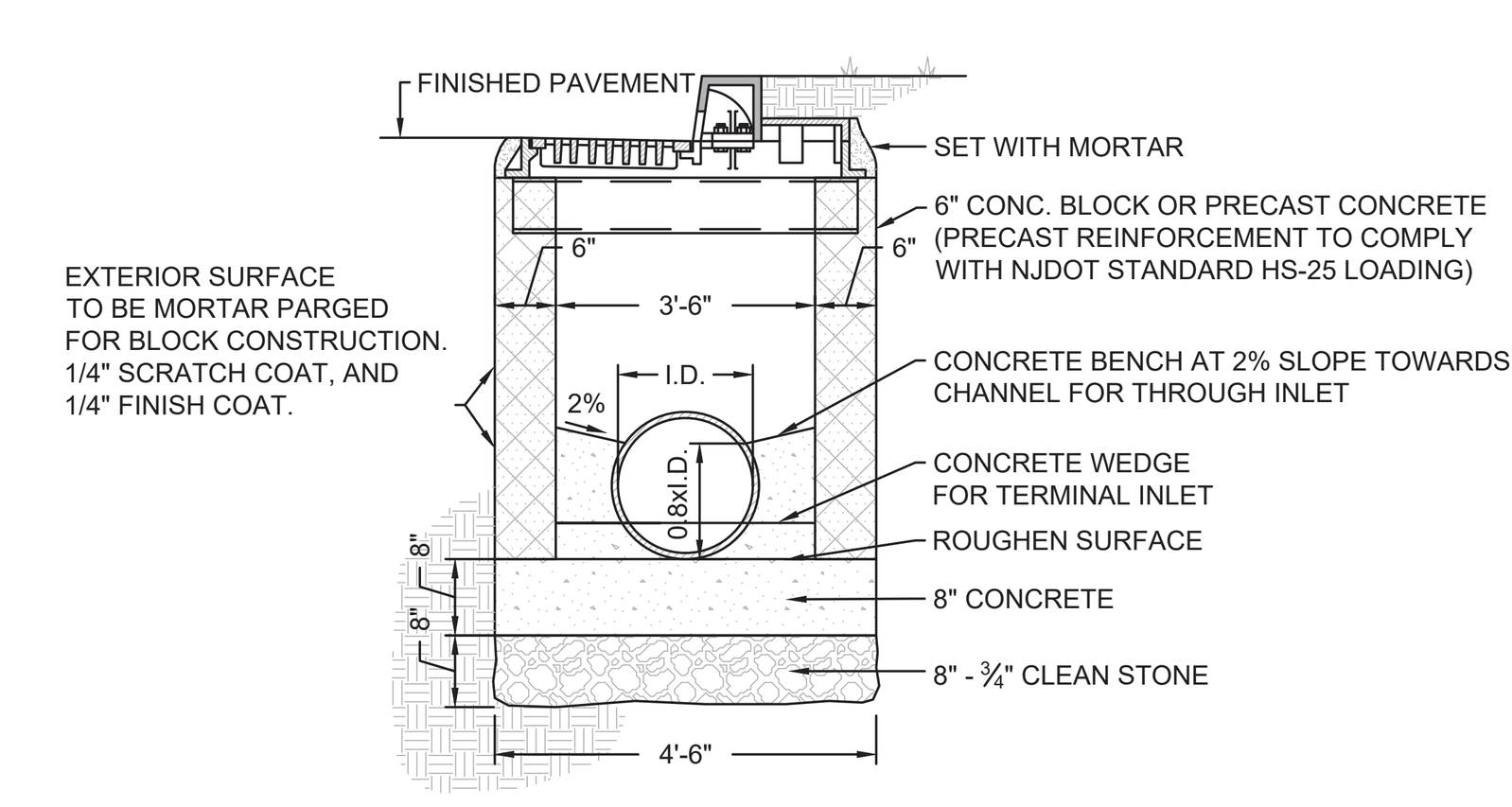

SECTION B-B

NOTES:
- ALL PRECAST CONCRETE STRUCTURES, CONCRETE BLOCK, OR FORM-IN-PLACE CONCRETE SHALL BE MADE OF NJDOT CLASS 'B', 4000 PSI CONCRETE WITH 5% TO 7% AIR ENTRAINMENT.
- UNLESS OTHERWISE SPECIFIED, ALL MATERIALS SHALL BE COMPACTED TO 95% MODIFIED PROCTOR DENSITY.
- LADDER RUNGS SHALL BE PROVIDED IN ALL STRUCTURES EVERY 12" STARTING A MAXIMUM OF 12" FROM THE TOP OF THE CONCRETE INFILL TO WITHIN NO MORE THAN 24" FROM THE GRATE.
- INSTALL LADDER RUNGS ON SIDE FACING TRAFFIC.
- LADDER RUNGS TO COMPLY WITH ASTM C478 OR SPECIFIED DETAIL.
- STRUCTURE SHALL BE INSTALLED ON 8" THICK PAD OF ¾" CLEAN STONE INSTALLED ON FIRM BEARING.
- THE CONTRACTOR SHALL SUBMIT SHOP DRAWINGS FOR ALL STRUCTURES, SIGNED AND SEALED BY A PROFESSIONAL ENGINEER LICENSED TO PRACTICE IN THE STATE, INDICATING THAT THE STRUCTURE IS DESIGNED FOR HS-25 LOADING.
- PAVE CHANNEL INVERT ALONG ℄ OF SINGLE OUTLET PIPE OR BETWEEN ℄'S OF 2 OR MORE PIPE OPENINGS

13 DOUBLE TYPE "B" INLET
SCALE: NTS

REV. / ISSUE	DATE	DESCRIPTION
1	11/12/18	REVISED PER BOARD COMMENTS

CONSULTANT

ORIENTATION / KEY PLAN

PAULUS, SOKOLOWSKI AND SARTOR, LLC
67A MOUNTAIN BLVD EXT.
P.O. BOX 4039
WARREN, NEW JERSEY 07059
PHONE: (732) 560-9700

CERTIFICATE OF AUTHORIZATION NO. 24GA28032700

ALL DIMENSIONS MUST BE VERIFIED BY THE CONTRACTOR. NOTIFY PAULUS, SOKOLOWSKI AND SARTOR, LLC. OF ANY CONFLICTS, ERRORS, AMBIGUITIES OR DISCREPANCIES IN THE CONTRACT DRAWINGS OR SPECIFICATIONS BEFORE PROCEEDING WITH CONSTRUCTION.

ALL DIMENSIONS SHALL BE AS NOTED IN WORDS OR NUMBERS ON THE CONTRACT DRAWINGS. DO NOT SCALE THE DRAWINGS TO DETERMINE DIMENSIONS.

THESE CONTRACT DRAWINGS CONTAIN DATA INTENDED SPECIFICALLY FOR THE NOTED PROJECT AND CLIENT. THEY ARE NOT INTENDED FOR USE ON EXTENSIONS OF THIS PROJECT OR FOR REUSE ON ANY OTHER PROJECT.

THE COPYING AND/OR MODIFICATION OF THIS DOCUMENT OR ANY PORTION THEREOF WITHOUT THE WRITTEN PERMISSION OF PAULUS, SOKOLOWSKI AND SARTOR, LLC. IS PROHIBITED.

UNLESS THESE DRAWINGS ARE SPECIFICALLY DESIGNATED AS "CONSTRUCTION ISSUE", THESE DRAWINGS SHALL NOT BE USED FOR CONSTRUCTION OR IMPROVEMENTS DEPICTED HEREIN. CONTRACTORS SHALL NOTIFY THE DESIGN ENGINEER TO OBTAIN CONSTRUCTION DOCUMENTS.

COPYRIGHT 2019 PAULUS, SOKOLOWSKI AND SARTOR, LLC. – ALL RIGHTS RESERVED.

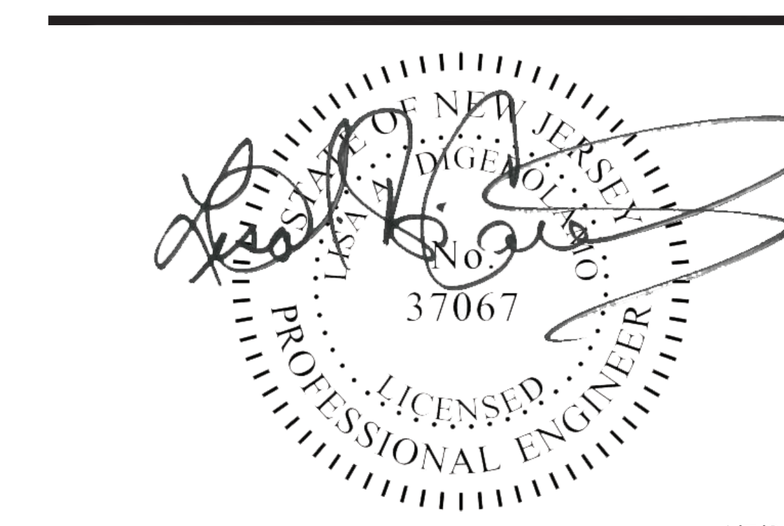

1/7/2019

CLIENT

PROJECT

NEW JERSEY CENTER OF EXCELLENCE
1041 N.J.S.H. ROUTE 202/206
BLOCK 483, LOTS 17, 18 & 19
TOWNSHIP OF BRIDGEWATER
SOMERSET COUNTY, NEW JERSEY 08807

SHEET TITLE

STORMWATER DETAILS (SHEET 1 OF 2)

JOB NO.:	00488.0041
DATE:	05/09/2018
DRAWN:	TB/CY
CHECK:	CH/LAD
SCALE:	N.T.S.

SHEET NO. 22 OF 75

C-22

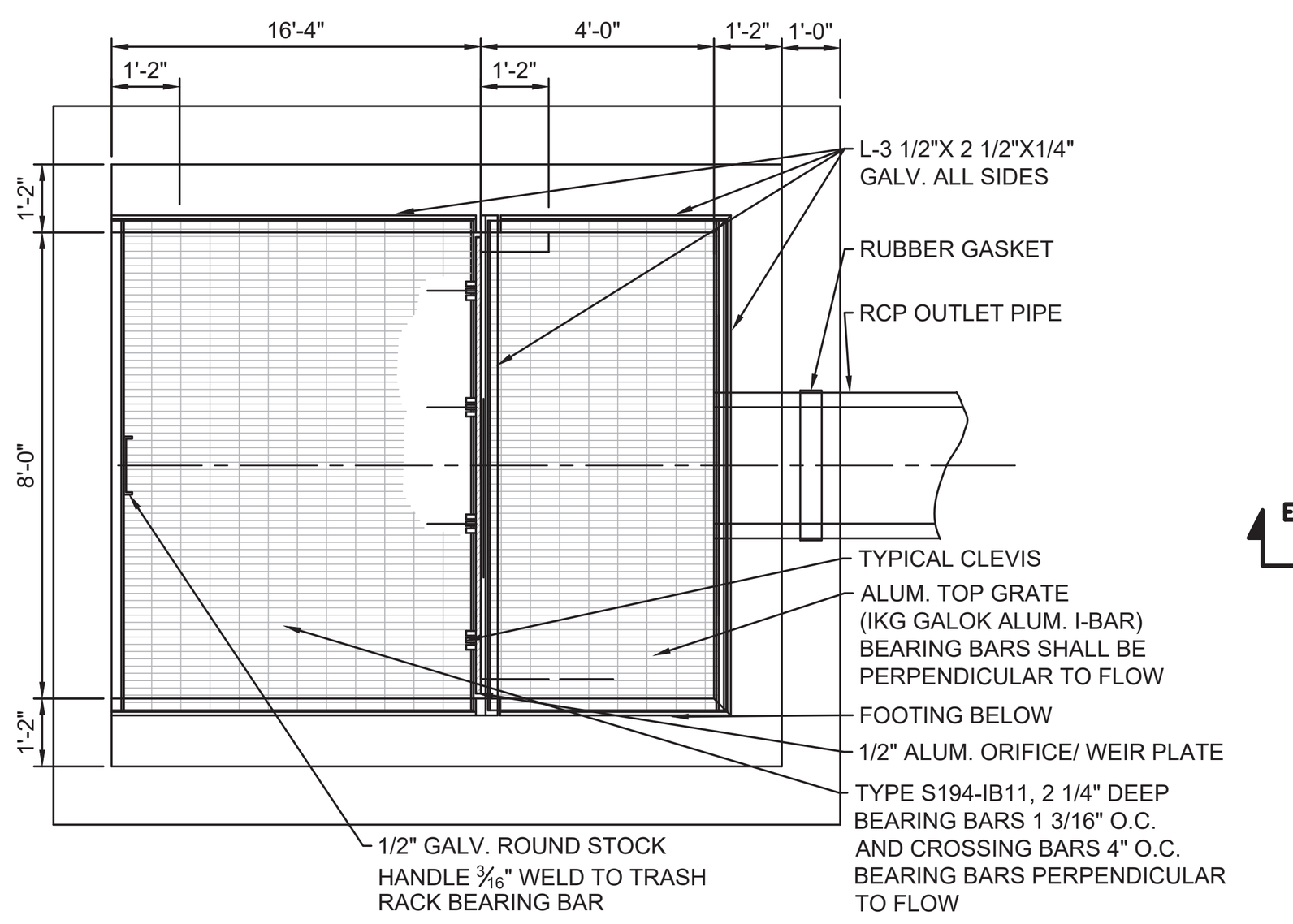

PLAN

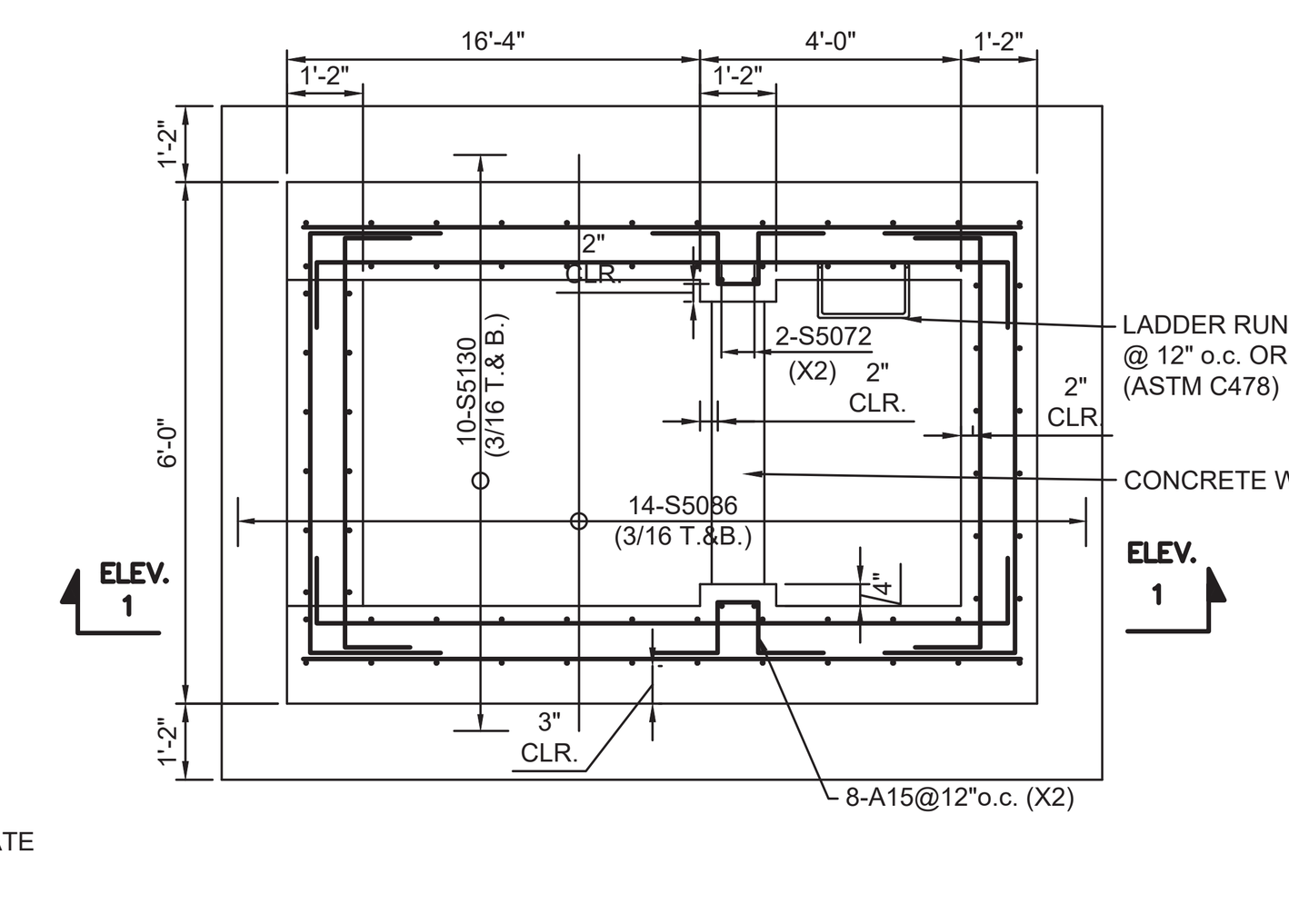

FOUNDATION PLAN

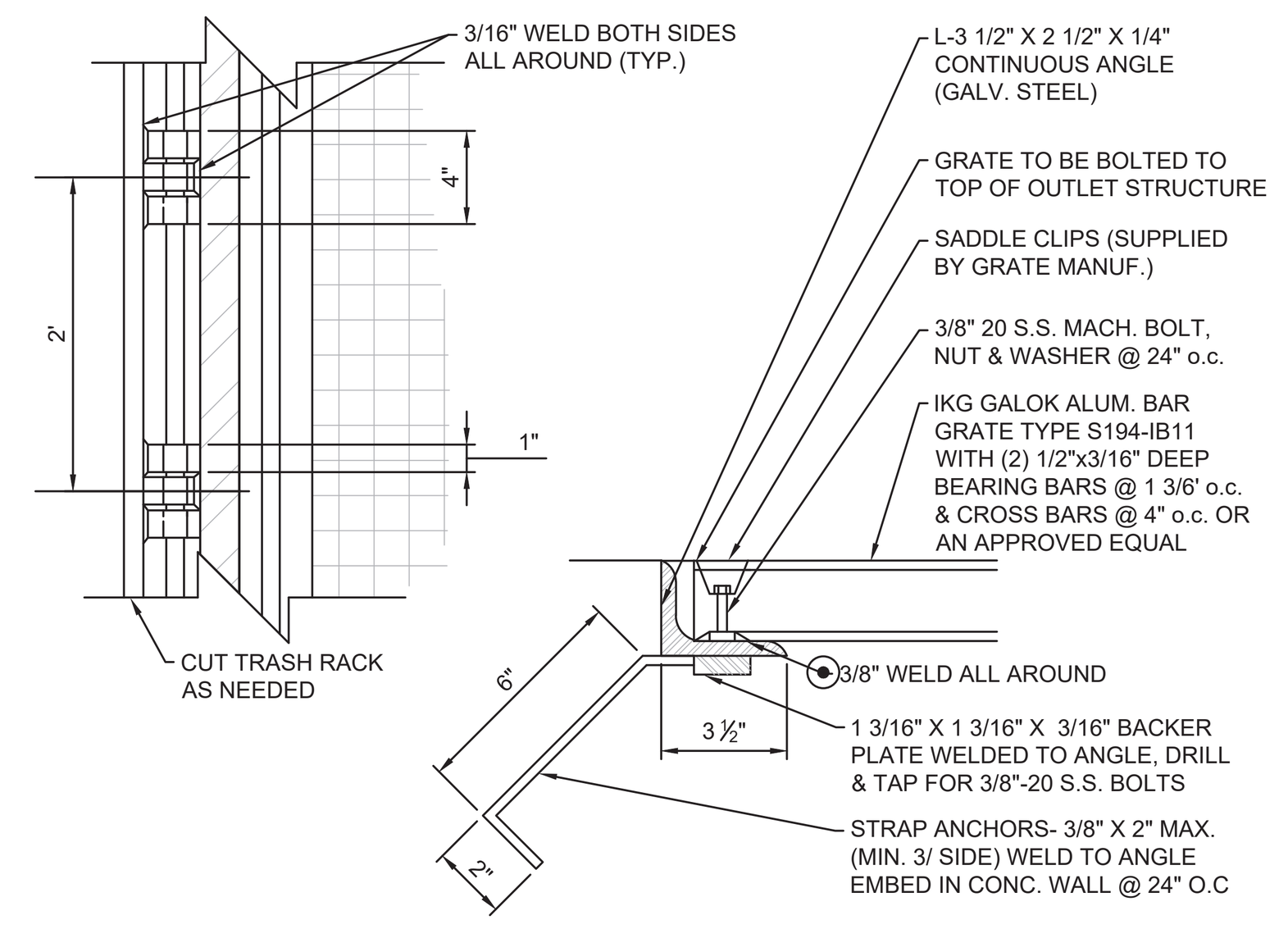

GRATE & TRASH RACK SUPPORT

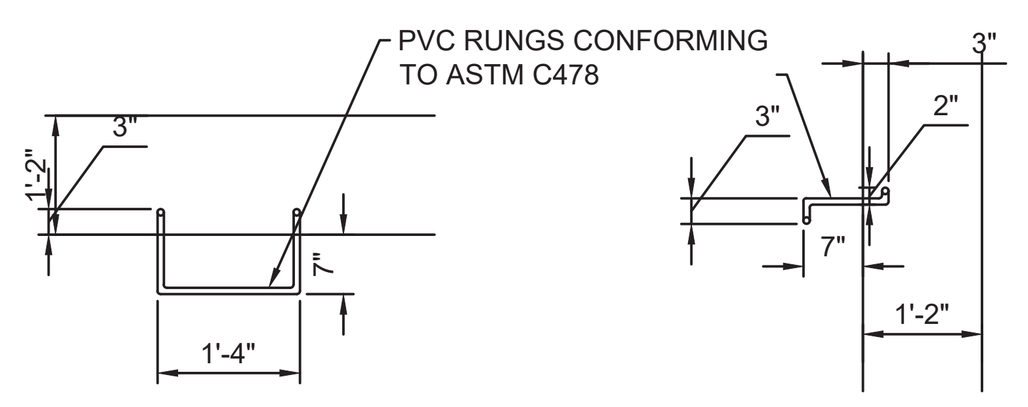

PLAN

ELEVATION

LADDER RUNG

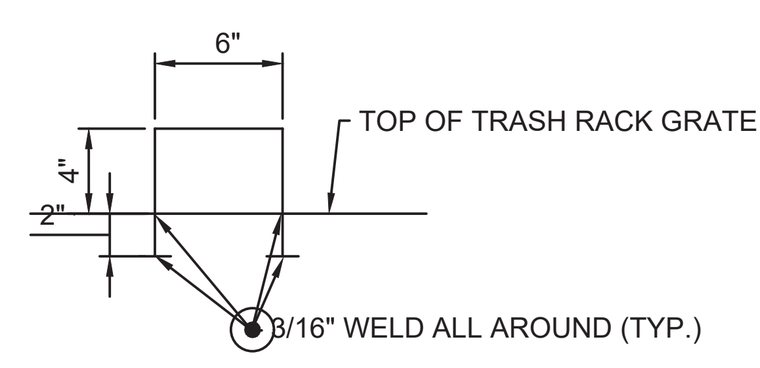

TRASH RACK HANDLE

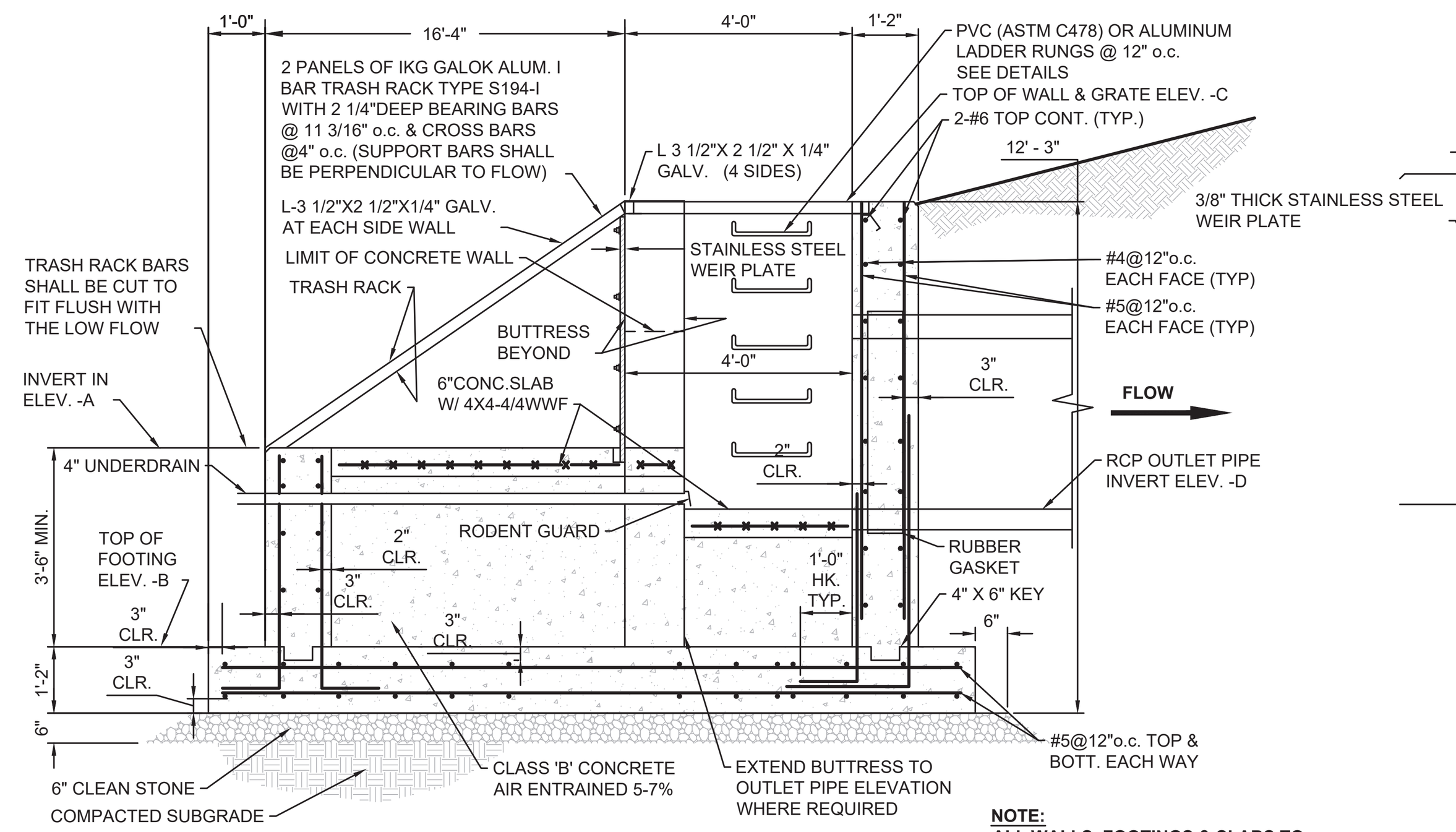

NOTE:
ALL WALLS, FOOTINGS & SLABS TO BE CLASS 'B' CONCRETE.

ELEVATION 1-1

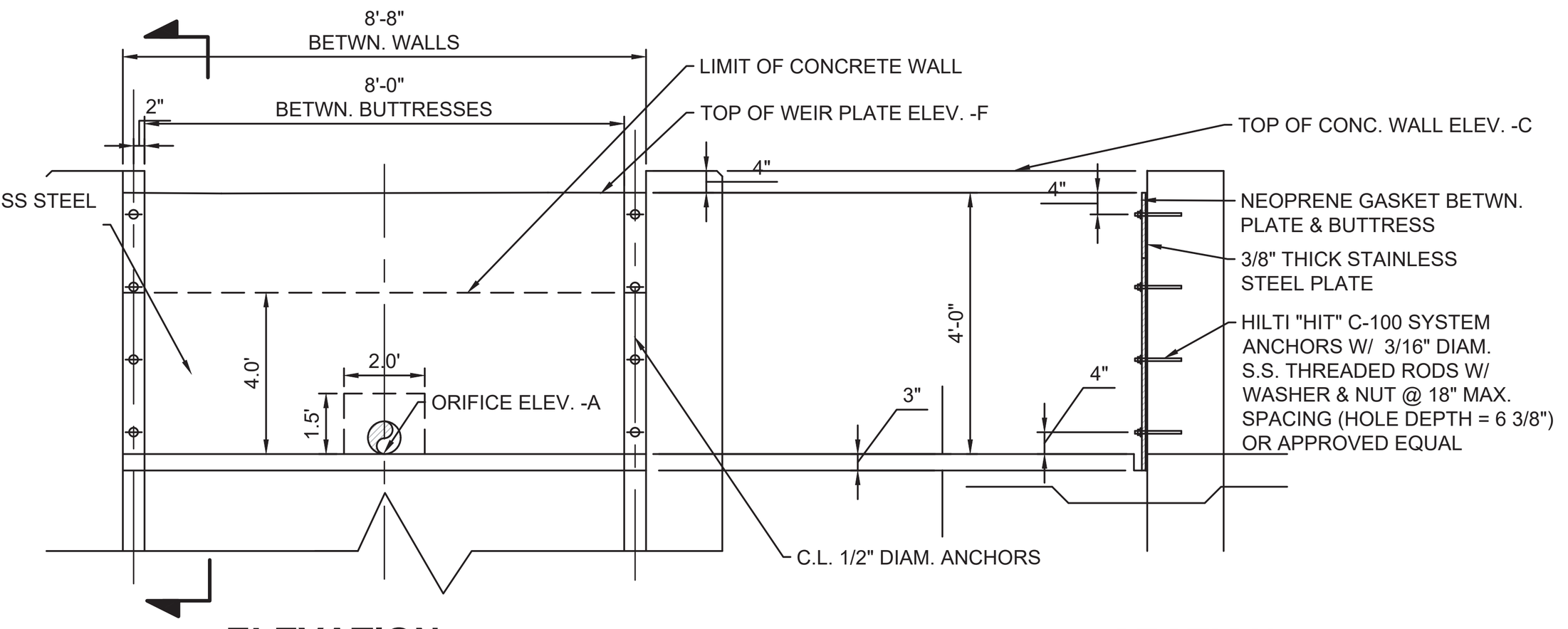

ELEVATION

SECTION

ORIFICE / WEIR PLATE

POND	TOP OF FOOTING	ORIFICE		RECTANGULAR WEIR		OUTLET PIPE		TOP OF WALL
	ELEV. -B	ELEV. -A	SIZE	LENGTH	ELEV. -F	ELEV. -D	SIZE	ELEV. -C
BASIN	140.50'	144.00'	12"x12"	8.0'	149.11'	141.00'	54.0"	151.75'

1 OUTLET STRUCTURE
SCALE: NTS

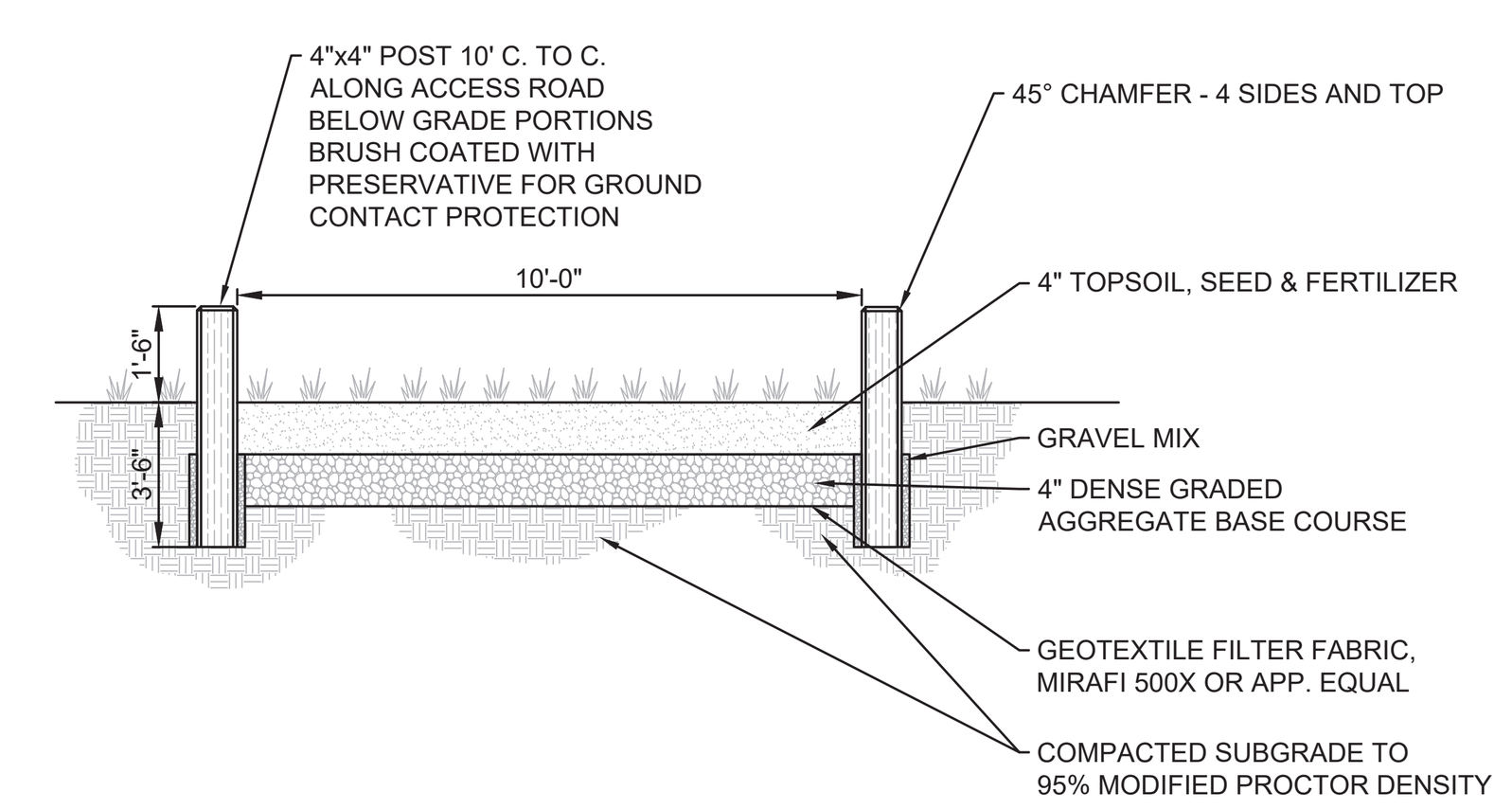

NOTES:
1. **CONSTRUCTED OF WOLMANIZED DOUGLAS FIR**
2. **ROUGH SAWN TEXTURE**
3. **STAINED DARK BROWN WOODLIFE PRESERVATIVE**

2 STABILIZED BASIN ACCESS ROAD
SCALE: NTS

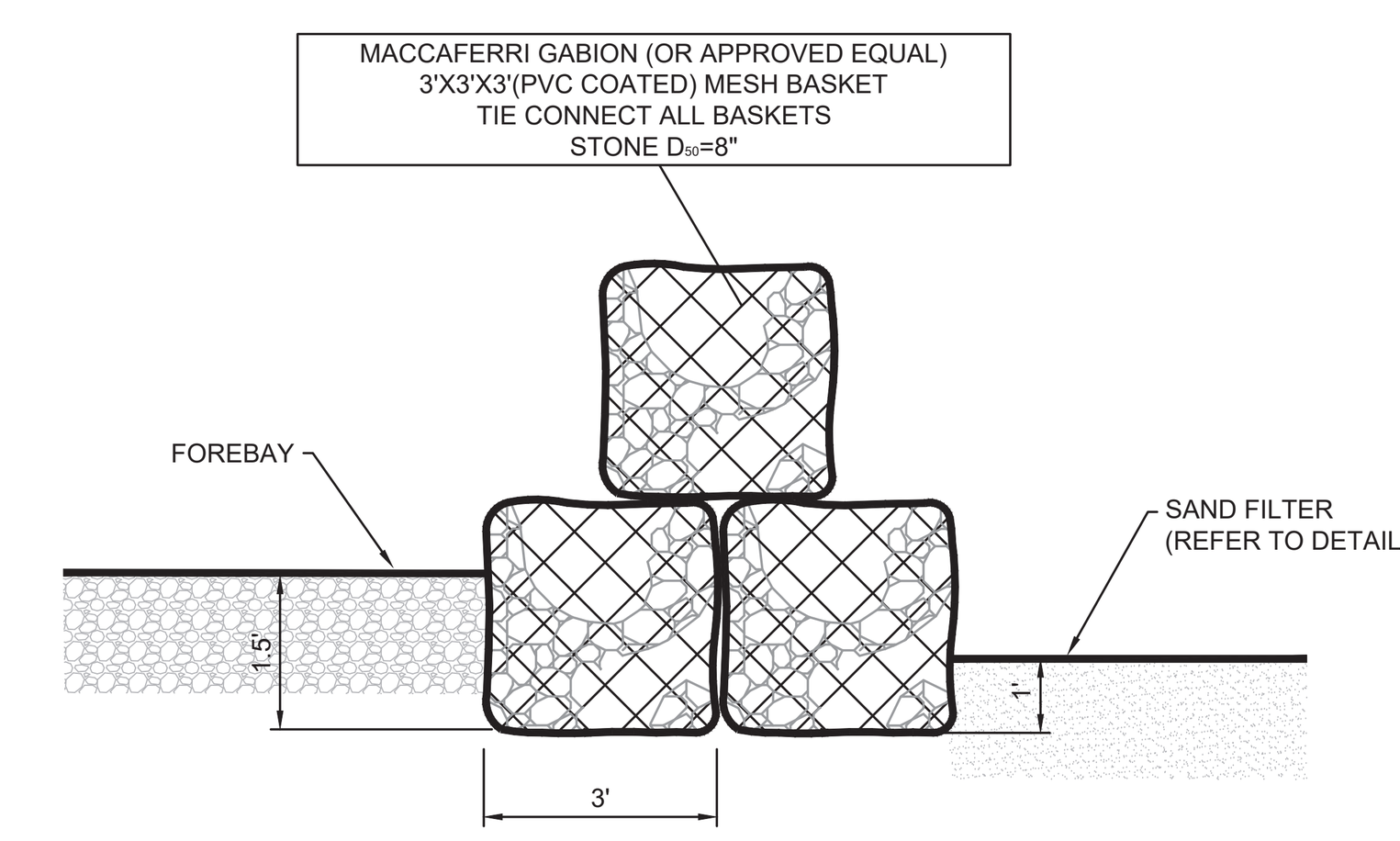

3 GABION BASKET WALL
SCALE: NTS

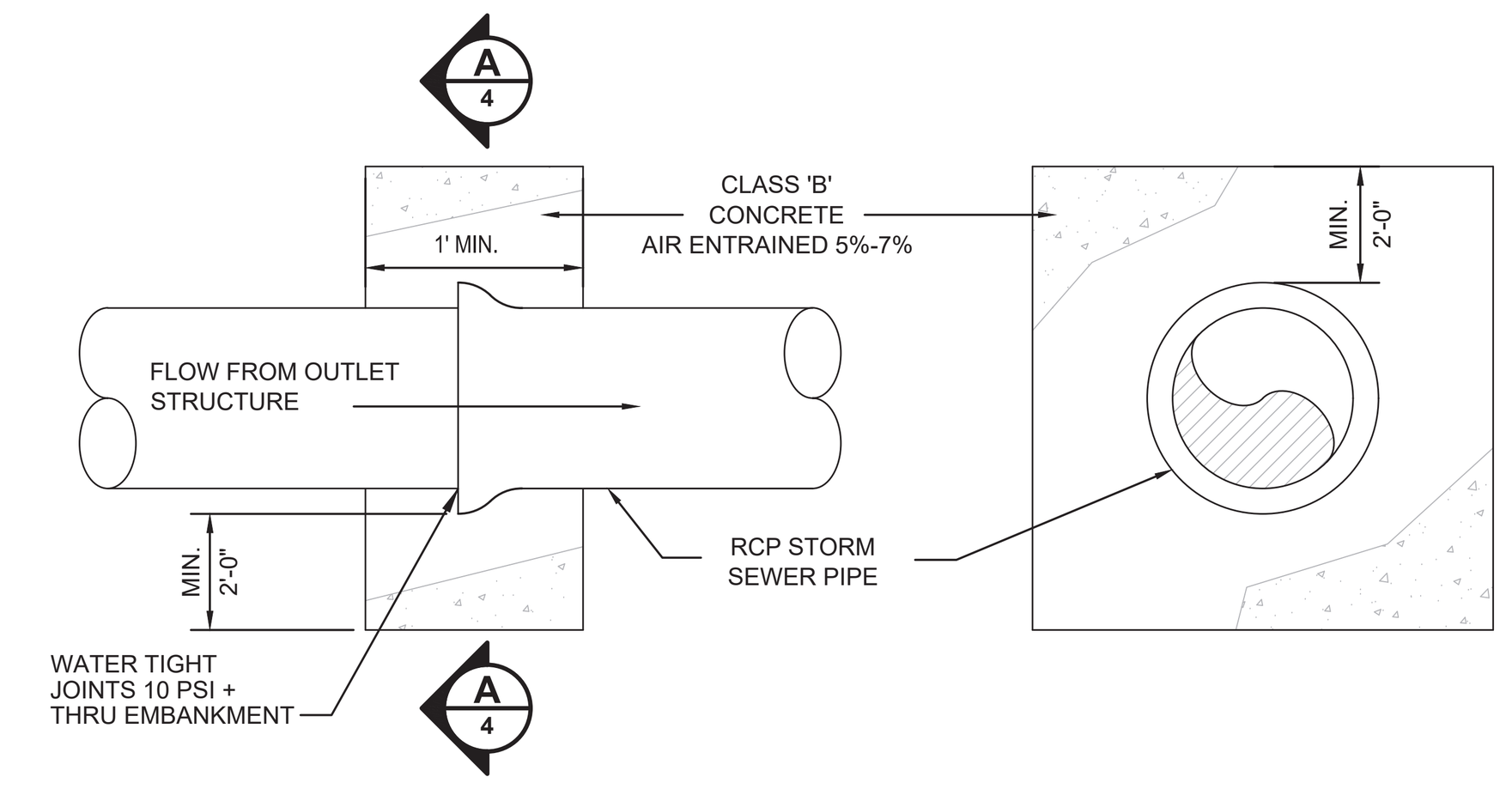

PLAN

SECTION A-A

4 ANTI-SEEP COLLAR
SCALE: NTS

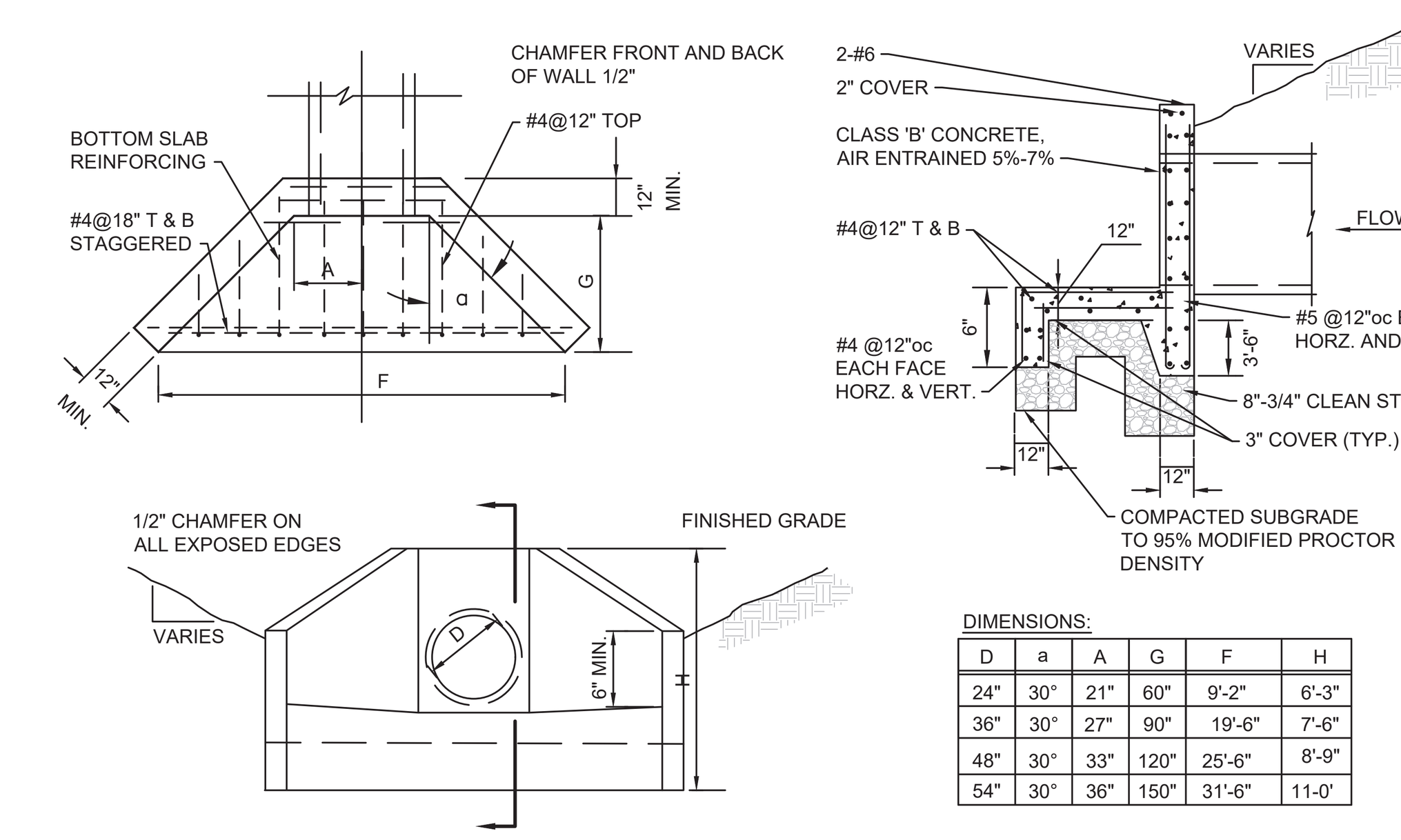

DIMENSIONS:

D	a	A	G	F	H
24"	30°	21"	60"	9'-2"	6'-3"
36"	30°	27"	90"	19'-6"	7'-6"
48"	30°	33"	120"	25'-6"	8'-9"
54"	30°	36"	150"	31'-6"	11-0'

NOTES:
1. **ALL PRECAST CONCRETE STRUCTURES, CONCRETE BLOCK, OR FORM-IN-PLACE CONCRETE SHALL BE MADE OF NJDOT CLASS 'B' CONCRETE WITH 5% TO 7% AIR ENTRAINMENT.**
2. **UNLESS OTHERWISE SPECIFIED, ALL MATERIALS SHALL BE COMPACTED TO 95% MODIFIED PROCTOR DENSITY.**
3. **THE CONTRACTOR SHALL SUBMIT SHOP DRAWINGS FOR ALL STRUCTURES, SIGNED AND SEALED BY A PROFESSIONAL ENGINEER LICENSED TO PRACTICE IN THE STATE.**

5 CONCRETE HEADWALL
SCALE: NTS

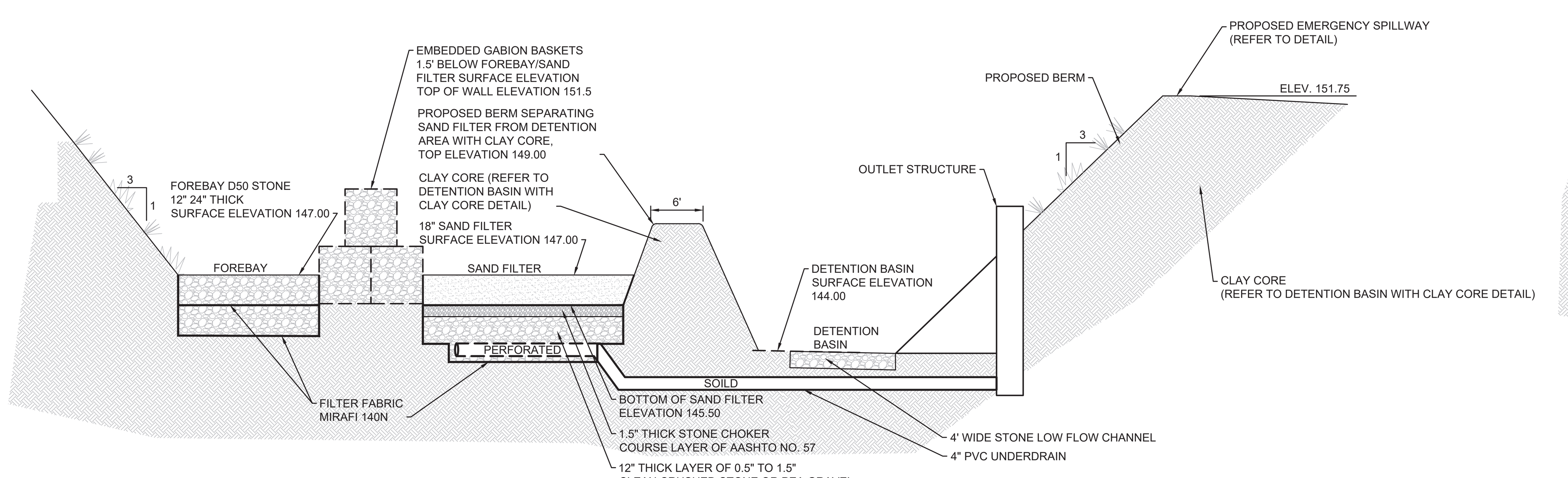

SECTION A-A

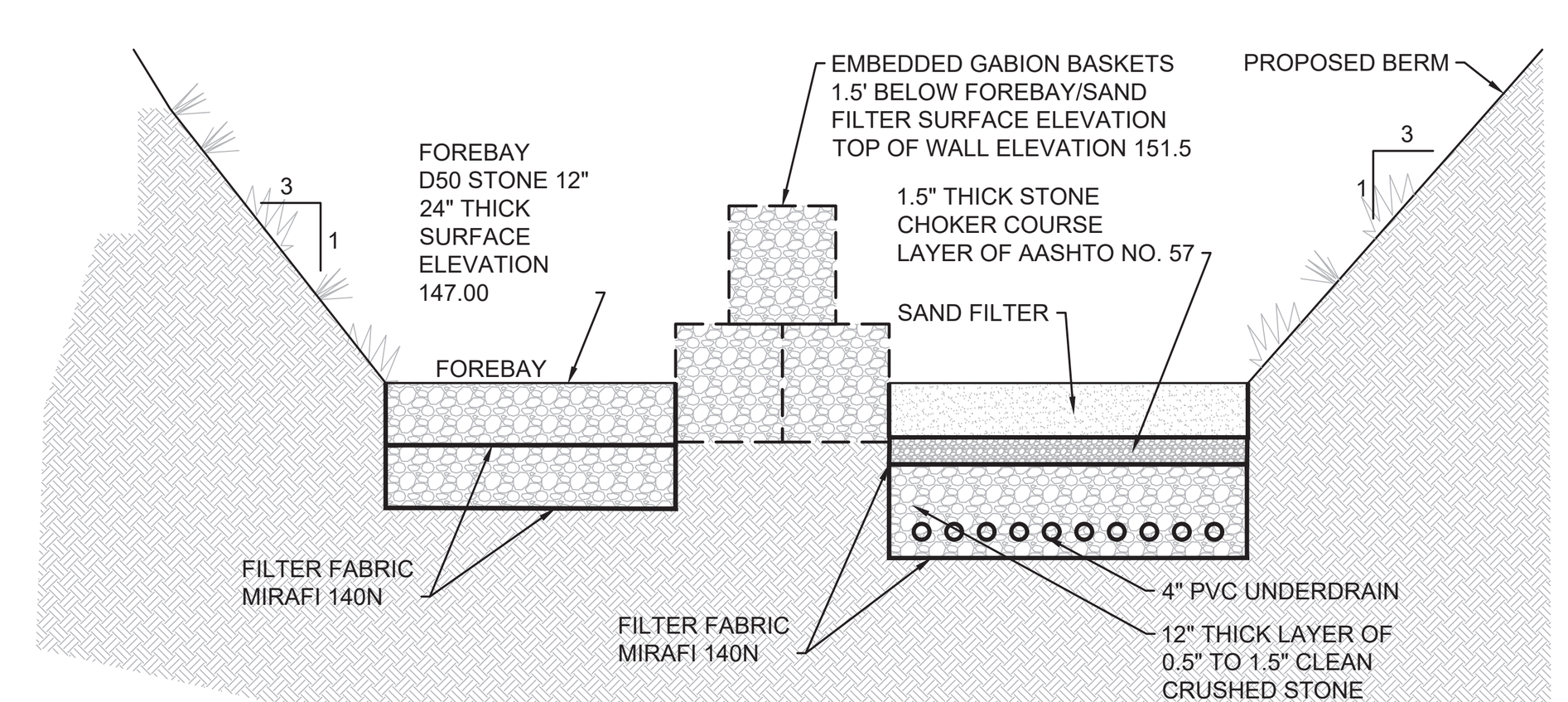

SECTION B-B

NOTES:
1. **SAND IN THE SAND FILTER SHALL MEET THE SPECIFICATIONS FOR CLEAN, MEDIUM AGGREGATE CONCRETE SAND AND SHALL MEET THE REQUIREMENTS OF AASHTO M-6 OR ASTM C-33 AND SHALL HAVE AN INFILTRATION RATE OF 1" TO 2" PER HOUR.**
2. **CONTRACTOR TO PROVIDE SIGNED AND SEALED CERTIFICATION FROM ENGINEER CONFIRMING COMPLIANCE WITH THE REQUIREMENTS.**
3. **THE SEASONAL HIGH GROUNDWATER MUST BE AT LEAST 1 FOOT BELOW THE BOTTOM OF THE SAND FILTER UNDERDRAINS.**
4. **THE SEASONAL HIGH GROUNDWATER MUST BE AT LEAST 1 FOOT BELOW THE BOTTOM OF THE DETENTION BASIN.**

6 FOREBAY / SAND FILTER / DETENTION BASIN CROSS SECTION
SCALE: NTS

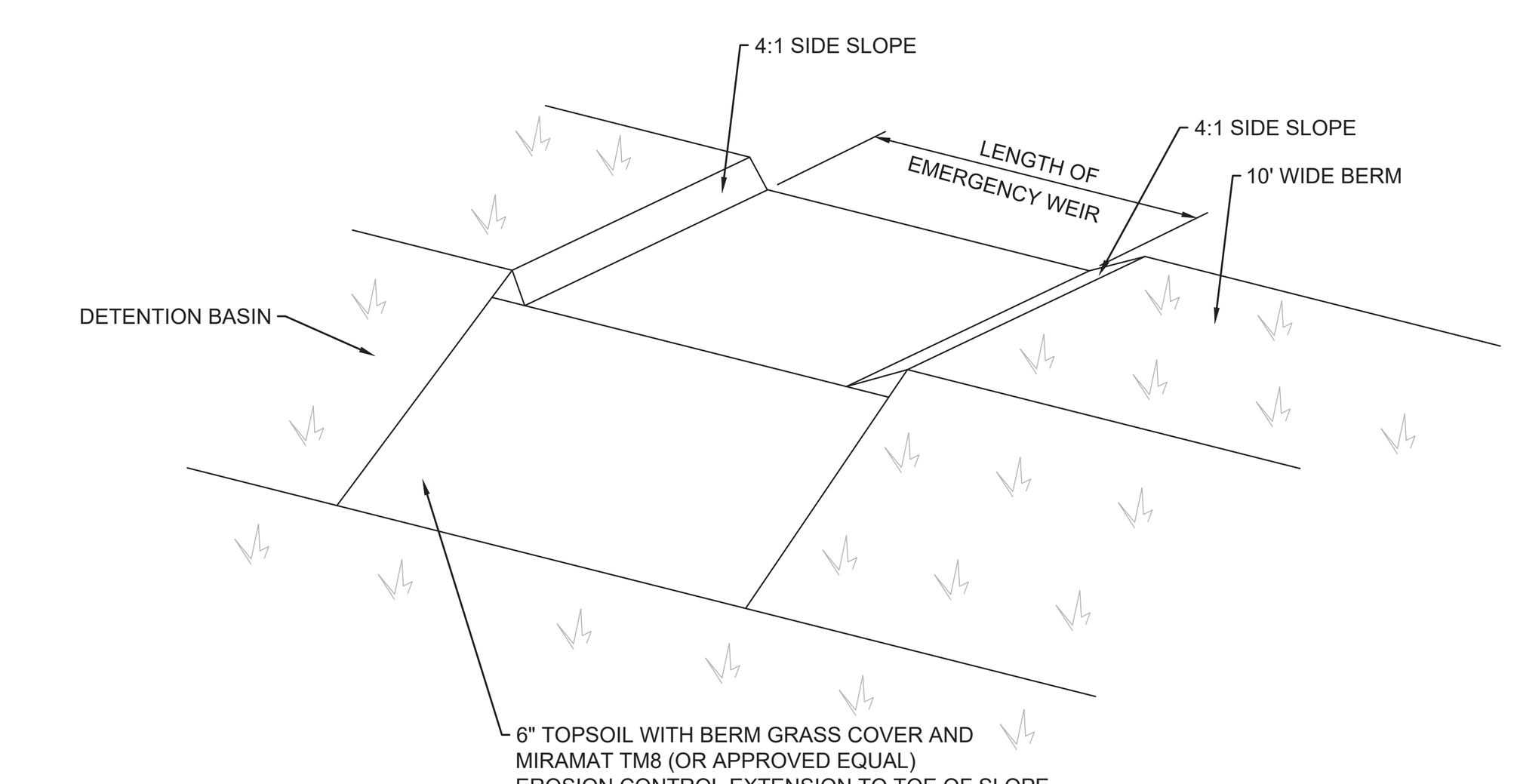

BASIN	BERM CREST EL.	LGTH. EMERG. WEIR
DETENTION	151.75	40.0'

7 BASIN EMERGENCY SPILLWAY
SCALE: NTS

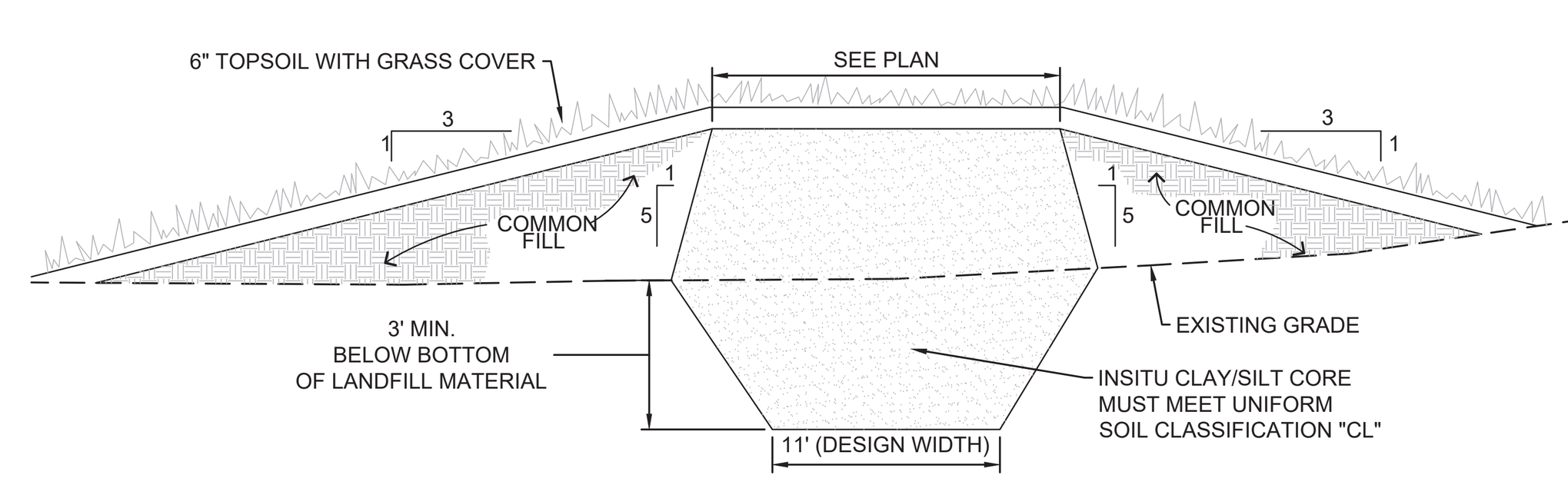

NOTE:
BERM AND CLAY CORE MATERIAL SHALL BE COMPACTED IN 8" LIFTS TO A DENSITY OF 95% MODIFIED PROCTOR

8 DETENTION BASIN BERM WITH CLAY CORE
SCALE: NTS

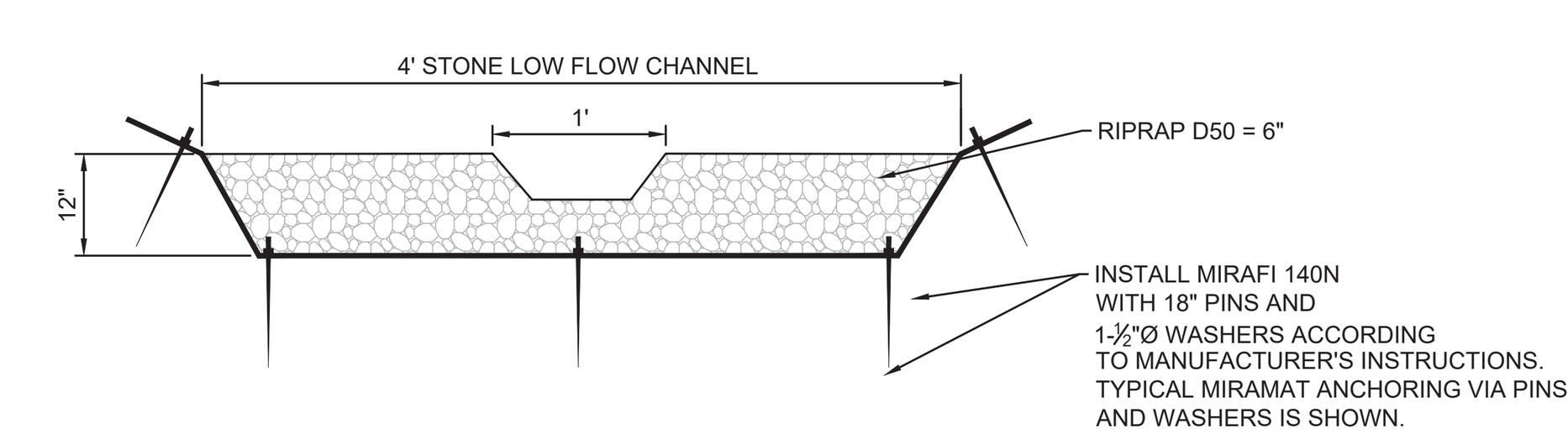

NOTE:
SEE PLAN FOR LOCATION & DIMENSIONS

9 STONE LOW FLOW CHANNEL
SCALE: NTS

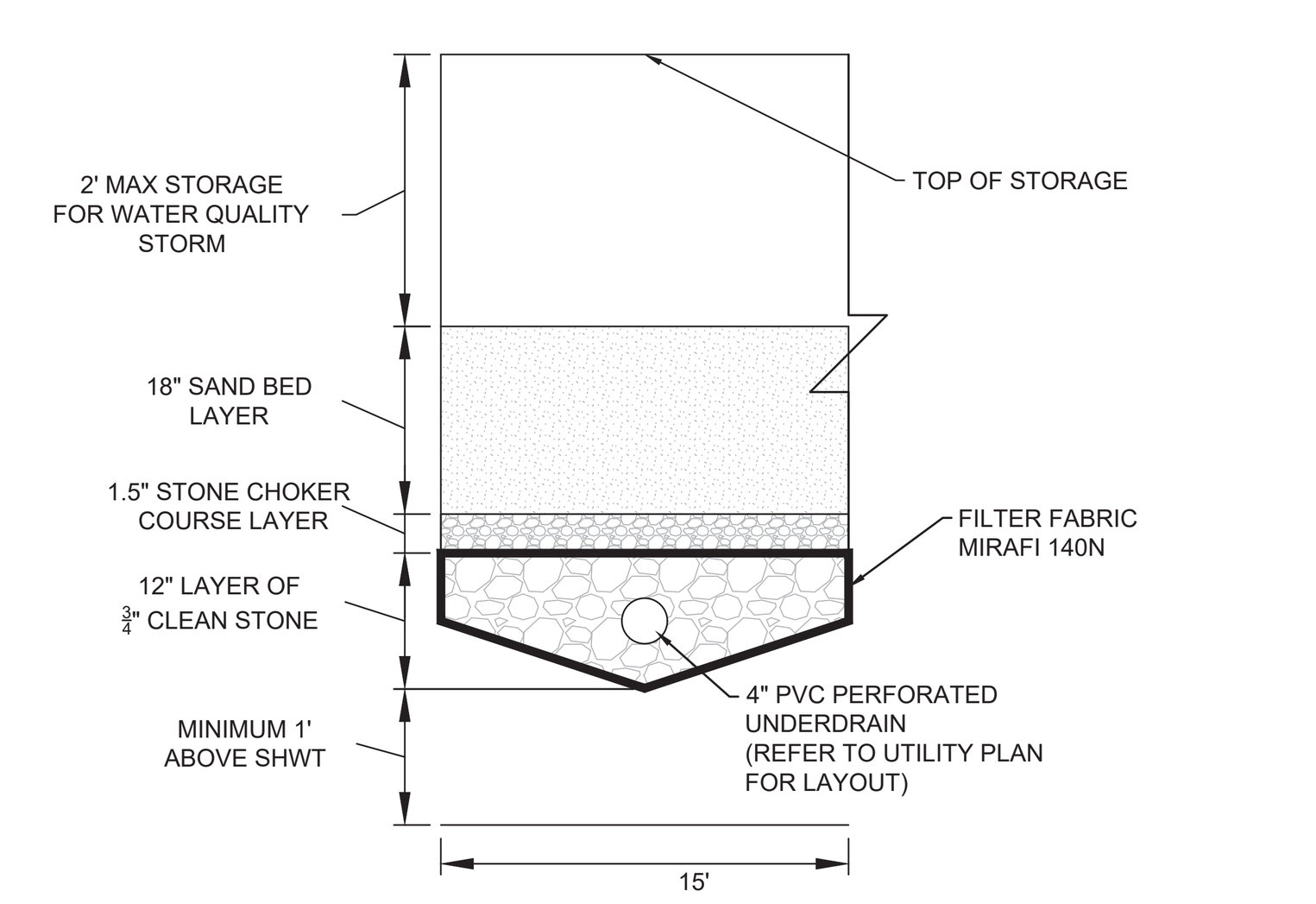

NOTE:
SEASONAL HIGH GROUNDWATER MUST BE AT LEAST 1 FOOT BELOW THE BOTTOM OF THE SAND FILTER UNDERDRAINS.

10 SAND FILTER UNDERDRAIN CROSS SECTION
SCALE: NTS

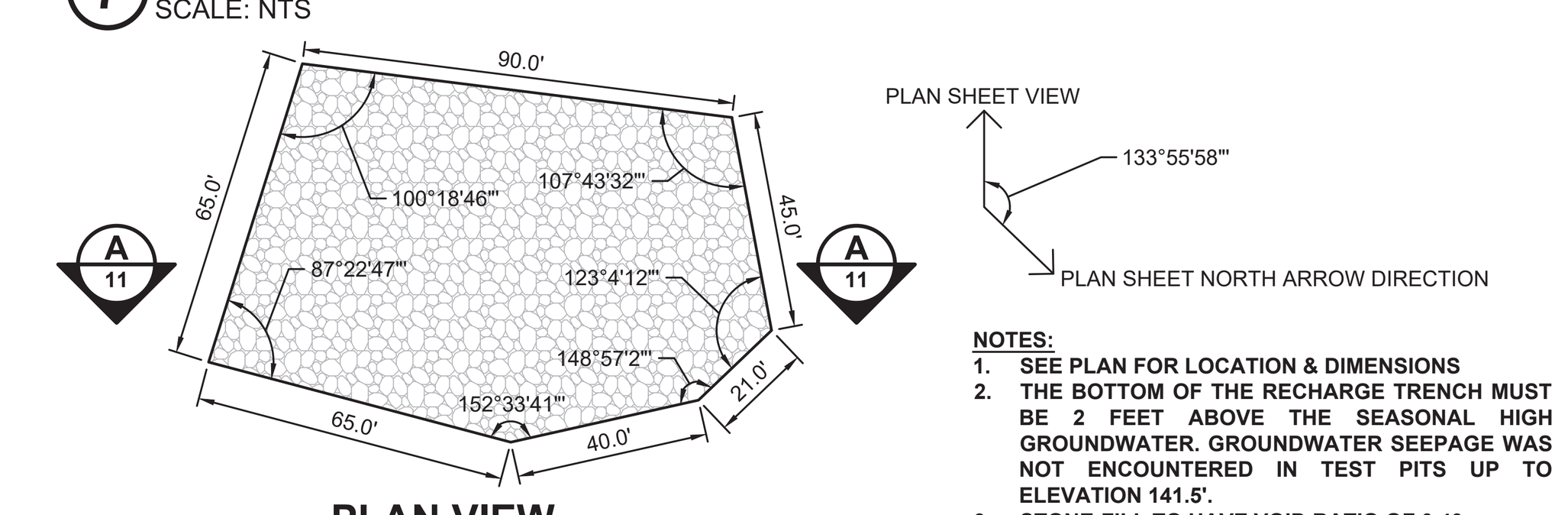

PLAN VIEW

NOTES:
1. **SEE PLAN FOR LOCATION & DIMENSIONS**
2. **THE BOTTOM OF THE RECHARGE TRENCH MUST BE 2 FEET ABOVE THE SEASONAL HIGH GROUNDWATER. GROUNDWATER SEEPAGE WAS NOT ENCOUNTERED IN TEST PITS UP TO ELEVATION 141.5'.**
3. **STONE-FILL TO HAVE VOID RATIO OF 0.40.**

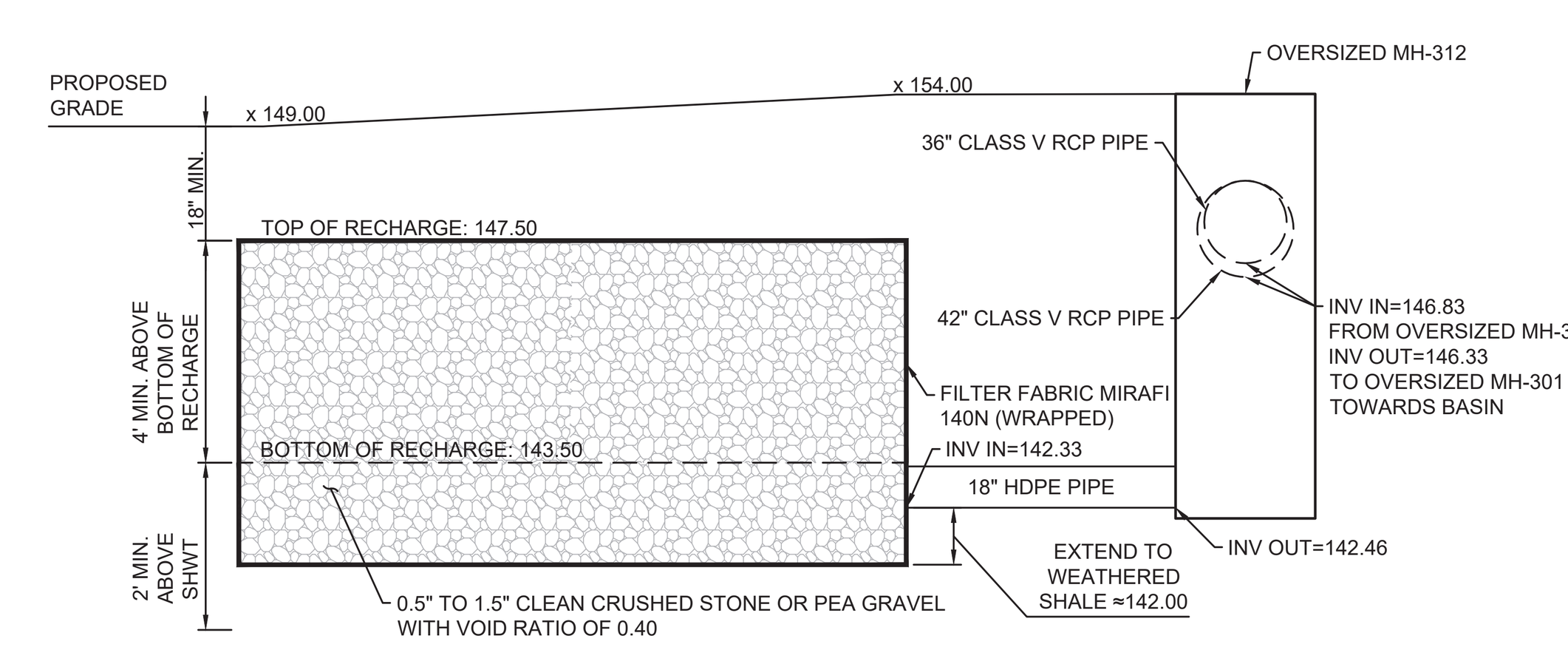

SECTION A-A

11 RECHARGE TRENCH
SCALE: NTS

REV. / ISSUE	DATE	DESCRIPTION
1	11/12/18	REVISED PER BOARD COMMENTS

CONSULTANT

ORIENTATION / KEY PLAN

PAULUS, SOKOLOWSKI AND SARTOR, LLC
67A MOUNTAIN BLVD EXT.
P.O. BOX 4039
WARREN, NEW JERSEY 07059
PHONE: (732) 560-9700

CERTIFICATE OF AUTHORIZATION NO. 24GA28032700

ALL DIMENSIONS MUST BE VERIFIED BY THE CONTRACTOR. NOTIFY PAULUS, SOKOLOWSKI AND SARTOR, LLC. OF ANY CONFLICTS, ERRORS, AMBIGUITIES OR DISCREPANCIES IN THE CONTRACT DRAWINGS OR SPECIFICATIONS BEFORE PROCEEDING WITH CONSTRUCTION.

ALL DIMENSIONS SHALL BE AS NOTED IN WORDS OR NUMBERS ON THE CONTRACT DRAWINGS. DO NOT SCALE THE DRAWINGS TO DETERMINE DIMENSIONS.

THESE CONTRACT DRAWINGS CONTAIN DATA INTENDED SPECIFICALLY FOR THE NOTED PROJECT AND CLIENT. THEY ARE NOT INTENDED FOR USE ON EXTENSIONS OF THIS PROJECT OR FOR REUSE ON ANY OTHER PROJECT.

THE COPYING AND/OR MODIFICATION OF THIS DOCUMENT OR ANY PORTION THEREOF WITHOUT THE WRITTEN PERMISSION OF PAULUS, SOKOLOWSKI AND SARTOR, LLC. IS PROHIBITED.

UNLESS THESE DRAWINGS ARE SPECIFICALLY DESIGNATED AS "CONSTRUCTION ISSUE", THESE DRAWINGS SHALL NOT BE USED FOR CONSTRUCTION OR IMPROVEMENTS DEPICTED HEREIN. CONTRACTORS SHALL NOTIFY THE DESIGN ENGINEER TO OBTAIN CONSTRUCTION DOCUMENTS.

COPYRIGHT 2019 PAULUS, SOKOLOWSKI AND SARTOR, LLC. – ALL RIGHTS RESERVED.

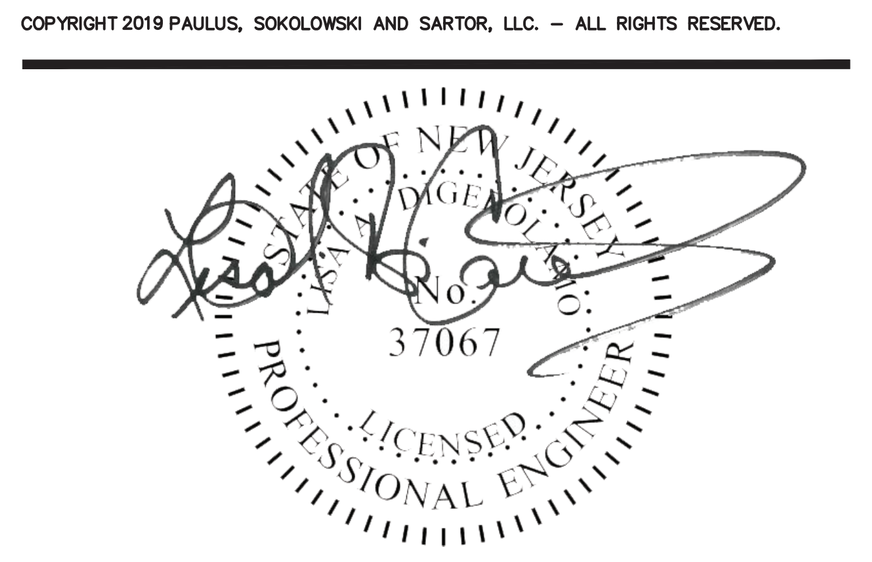

1/7/2019

CLIENT

PROJECT

NEW JERSEY
CENTER OF EXCELLENCE

1041 N.J.S.H. ROUTE 202/206
BLOCK 483, LOTS 17, 18 & 19

TOWNSHIP OF BRIDGEWATER
SOMERSET COUNTY, NEW JERSEY 08807

SHEET TITLE

STORMWATER DETAILS (SHEET 2 OF 2)

JOB NO.:	00488.0041
DATE:	05/09/2018
DRAWN:	TB/CY
CHECK:	CH/LAD
SCALE:	N.T.S.

SHEET NO. 23 OF 75

C-23

FILE NAME: P:\00488\0041\DWGs\C-Civil\Plotdwgs\C-20-XX DETAILS.dwg \ C-23 LAST EDIT: 01/07/2019 - 02:18:42 PM LOGIN: tberninger@